Polo 1995 ➤

4AV injection and ignition system									
Engine ID	AJV								

Edition 06.1998

Protected by copyright. Copying for private or commercial purposes, in part or in whole, is not permitted unless authorised by Volkswagen AG. Volkswagen AG does not guarantee or accept any liability with respect to the correctness of information in this document. Copyright by Volkswagen AG.

satelettronica

List of Workshop Manual Repair GroupsList of Workshop Manual Repair GroupsList of Workshop Manual Repair Groups

Polo 1995 ➤

4AV injection and ignition system

Repair Group

01 - Self-diagnosis

24 - Mixture preparation, Injection

28 - Ignition system

Protected by copyright. Copying for private or commercial purposes, in part or in whole, is not permitted unless authorised by Volkswagen AG. Volkswagen AG does not guarantee or accept any liability with respect to the correctness of information in this document. Copyright by Volkswagen AG.

satelettronica

Technical information should always be available to the foremen and mechanics, because their careful and constant adherence to the instructions is essential to ensure vehicle road-worthiness and safety. In addition, the normal basic safety precautions for working on motor vehicles must, as a matter of course, be observed.

All rights reserved.
No reproduction without prior agreement from publisher.

Copyright © 2010 Volkswagen AG, Wolfsburg

00050206620

Contents

01 - Self-diagnosis . . . 1

1 **General to self-diagnosis . . . 1**
1.1 General to self-diagnosis . . . 1
1.2 Features of self-diagnosis . . . 1
1.3 Technical data of self-diagnosis . . . 1
1.4 Connecting fault reader V.A.G 1551 and selecting engine electronics control unit . . . 2
1.5 Connecting Vehicle Diagnosis, Testing and Information system VAS 5051 and selecting engine electronics control unit . . . 4

2 **Fault memory . . . 7**
2.1 Fault memory . . . 7
2.2 Interrogating and erasing fault memory . . . 7

3 **Fault table, fault codes 00263...00524 . . . 9**
3.1 Fault table, fault codes 00263...00524 . . . 9

4 **Fault table, fault codes 00525...17978 . . . 13**
4.1 Fault table, fault codes 00525...17978 . . . 13

5 **Final control diagnosis . . . 19**
5.1 Final control diagnosis . . . 19
5.2 Performing final control diagnosis . . . 19

6 **Measured value blocks . . . 24**
6.1 Measured value blocks . . . 24
6.2 Safety precautions . . . 24
6.3 Read measured value block . . . 24
6.4 Evaluating measured value blocks . . . 25

24 - Mixture preparation, Injection . . . 34

1 **Servicing injection system . . . 34**
1.1 Servicing injection system . . . 34
1.2 Fitting locations overview . . . 34
1.3 General notes on injection . . . 36
1.4 Removing and installing parts of the injection system . . . 38
1.5 Dismantling and assembling intake manifold . . . 47
1.6 Dismantling and assembling fuel rail with injectors . . . 49
1.7 Dismantling and assembling air cleaner . . . 52
1.8 Safety precautions . . . 55
1.9 Rules for cleanliness . . . 56
1.10 Technical data . . . 57

2 **Checking components . . . 57**
2.1 Checking components . . . 57
2.2 Checking Lambda probe heating . . . 57
2.3 Checking throttle valve control part . . . 59
2.4 Checking intake manifold pressure sender . . . 67
2.5 Checking intake air temperature sender . . . 70
2.6 Checking coolant temperature sender . . . 73
2.7 Checking engine speed sender . . . 75
2.8 Checking injectors . . . 77
2.9 Checking fuel pressure regulator and holding pressure . . . 84
2.10 Checking intake air system for leaks (unmetered air) . . . 87
2.11 Checking intake air preheating . . . 88
2.12 Wire routing engine wiring loom . . . 89

3 **Checking functions . . . 91**
3.1 Checking functions . . . 91
3.2 Checking Lambda probe and Lambda control . . . 91
3.3 Checking engine operating mode . . . 94

Protected by copyright. Copying for private or commercial purposes, in part or in whole, is not permitted unless authorised by Volkswagen AG. Volkswagen AG does not guarantee or accept any liability with respect to the correctness of information in this document. Copyright by Volkswagen AG.
satelettronica

4 Engine control unit 95
4.1 Engine control unit 95
4.2 Checking control unit voltage supply 95
4.3 Replacing engine control unit 97
4.4 Matching engine control unit to throttle valve control part 98
4.5 Matching engine control unit to electronic immobilizer 100
5 Checking additional signals 101
5.1 Checking additional signals 101
5.2 Checking speed signal 101
5.3 Checking signal from/to air conditioning system 102
5.4 Checking driving range signal 104
5.5 Checking rpm signal 105
5.6 Checking gearbox intervention signal when a gear is shifted 106

28 - Ignition system 109
1 Servicing ignition system 109
1.1 Servicing ignition system 109
1.2 General notes on ignition system 109
1.3 Removing and installing parts of the ignition system 110
1.4 Safety precautions 112
1.5 Test data, spark plugs 113
1.6 Checking Hall sender 114
1.7 Checking ignition transformer 115
1.8 Checking knock sensor 119

Protected by copyright. Copying for private or commercial purposes, in part or in whole, is not permitted unless authorised by Volkswagen AG. Volkswagen AG does not guarantee or accept any liability with respect to the correctness of information in this document. Copyright by Volkswagen AG.

satelettronica

01 - Self-diagnosis

1 - General to self-diagnosis

1.1 - General to self-diagnosis

Note:

The self-diagnosis monitors only a part of the injection and ignition system. For fault finding the binder "Fault finding engine" must also be used in every case.

1.2 - Features of self-diagnosis

The 4AV injection and ignition system control unit (J448) is equipped with a fault memory.

If faults occur in the sensors and components being monitored, they will be stored in the fault memory together with an indication of the type of fault.

After evaluating the information the engine control unit decides between 33 differing fault codes => Fault table Page 13 and stores these faults until the contents of the fault memory is erased.

Faults which only occur sporadically will have the addendum "sporadic fault" on the print out. These faults will be indicated on the display by the addendum "/SP". The cause of sporadic faults can be e.g. a loose contact or a brief open circuit. If a sporadic fault does not occur again within 40 warm-up phases (engine start below 50° C coolant temperature - switched off above 72° C), it will be erased from the fault memory.

The faults stored can be read-out with the fault reader V.A.G 1551 or the vehicle system tester V.A.G 1552 => Page 7 , interrogating and erasing fault memory.

The fault memory must be erased after the faults have been rectified => Page 7 .

Note:

General information for self-diagnosis is in the fault reader V.A.G 1551 and the vehicle system tester V.A.G 1552 instruction manuals.

1.3 - Technical data of self-diagnosis

Equipment

- The data transfer between control unit and fault reader V.A.G 1551 or vehicle system tester V.A.G 1552 is carried out in the operating mode "Rapid data transfer".
- The fault memory is a non-volatile memory and is therefore dependent on the voltage supply.

Control unit identification

The control unit version is displayed when the fault reader V.A.G 1551 or the vehicle system tester V.A.G 1552 is connected and engine electronics control unit selected => Page 2 .

Protected by copyright. Copying for private or commercial purposes, in part or in whole, is not permitted unless authorised by Volkswagen AG. Volkswagen AG does not guarantee or accept any liability with respect to the correctness of information in this document. Copyright by Volkswagen AG.
satelettronica

Selectable functions when using the fault reader V.A.G 1551 or V.A.G 1552

The prerequisites for selecting the desired functions can be taken from the following table.

Function		Prerequisite		
Functions on fault reader V.A.G 1551 or on system tester V.A.G 1552		Engine stopped, ignition switched on	Engine running at idling speed	Vehicle being driven
01	Interrogate control unit version	yes	yes	yes
02	Interrogate fault memory	yes1)	yes	yes
03	Final control diagnosis	yes	no	no
04	Basic setting2)	yes	no	no
05	Erase fault memory	yes	yes	yes
06	End output	yes	yes	yes
08	Read measured value block	yes	yes	yes

1) Only carry out with ignition switched on, when engine does not start.

2) Must be carried out after the following: Replacing engine control unit, throttle valve control part, engine or disconnecting battery.

1.4 - Connecting fault reader V.A.G 1551 and selecting engine electronics control unit

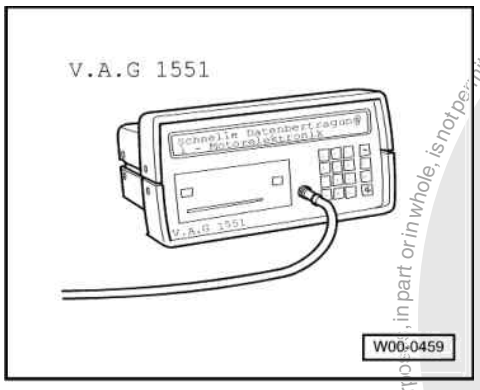

Special tools, workshop equipment, testers, measuring instruments and auxiliary items required

- -> V.A.G 1551 Fault reader

Note:

The vehicle system tester V.A.G 1552 can be used instead of the fault reader V.A.G 1551, however a print-out is not possible.

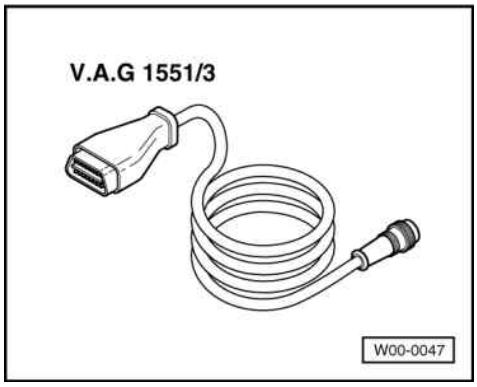

Protected by copyright. Copying for private or commercial purposes, in part or in whole, is not permitted unless authorised by Volkswagen AG. Volkswagen AG does not guarantee or accept any liability with respect to the correctness of information in this document. Copyright by Volkswagen AG.
satelettronica

- -> V.A.G 1551/3 Cable

Test conditions

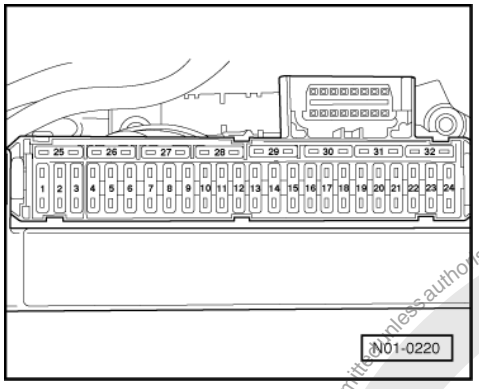

- -> The fuses 1, 2, 3, 4, 9, 10 and 32 must be OK.
- The battery voltage must be at least 11.5 V.
- Earth connection between engine (on gearbox bell housing) and body (below battery) OK.
- Earth connection in plenum chamber OK.

Work sequence

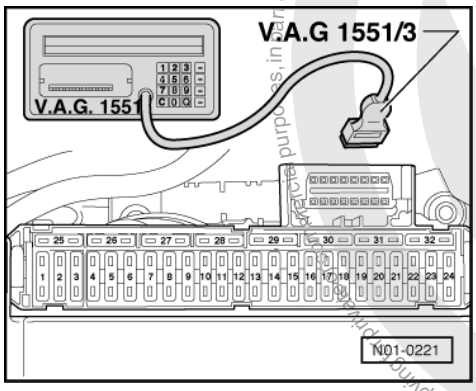

- -> Pull off cover in stowage compartment left below the steering wheel.
- Connect fault reader V.A.G 1551 or vehicle system tester V.A.G 1552 with cable V.A.G 1551/3.

After the fault reader has been connected:

- Depending upon desired function:
  Switch ignition on
  or
  Start engine => Page 2 , Table "Selectable functions".

Notes:

- If the display remains blank, check voltage supply for diagnostic connection according to fault finding programme:

=> Current flow diagrams, Electrical fault finding and Fitting locations

- If the display does not indicate as described in the work sequence:

=> Fault reader operating instructions

- If due to an input fault "Fault in the data transfer!" is displayed, pull wire off fault reader, reconnect and repeat work step.

- Operate fault reader taking into account the information on the display:

-> Indicated on display:

Protected by copyright. Copying for private or commercial purposes, in part or in whole, is not permitted unless authorised by Volkswagen AG. Volkswagen AG does not guarantee or accept any liability with respect to the correctness of information in this document. Copyright by Volkswagen AG.
satelettronica

```
V.A.G - SELF DIAGNOSIS     HELP
     1 - Rapid data transfer*
     2 - Flash code output*
```

* Appears alternately

- Operate fault reader taking into account the information on the display:
- Press key 1 for "Rapid data transfer".
- Press keys 0 and 1 for address word "Engine electronics" and confirm entry with Q key.

-> The control unit identification and the coding will appear on the display, e.g.:

```
036 906 041M     MARELLI 4AV     2271
Coding 00000     WSC XXXXX
```

- 036 906 014M = Part No. of the control unit (for latest control unit version see parts catalogue)
- MARELLI 4AV = System designation and version
- 2271 = Programme level number
- Coding 00000 = Control unit coding
- WSC xxxxx = Workshop code from V.A.G 1551, of the workshops who carried out the last coding. (If the factory coding has not been changed, WSC 00000 appears)

Note:

Replace control unit if the control version displayed does not correspond to the vehicle

=> Page 97 .

- Press ⇒key.

-> Indicated on display:

```
Rapid data transfer     HELP
Select function XX
```

- Further measures see repair procedures.

1.5 - Connecting Vehicle Diagnosis, Testing and Information system VAS 5051 and selecting engine electronics control unit

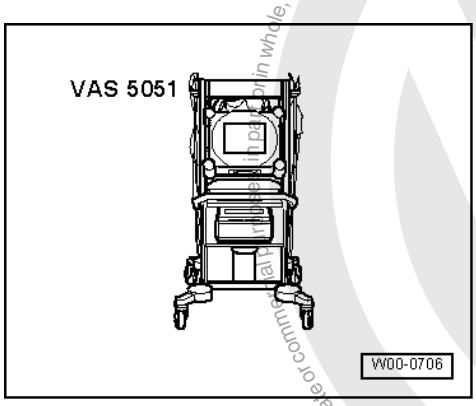

All the functions that were previously possible with the V.A.G 1551/1552 can be performed with the new tester VAS 5051 in operating mode Vehicle self-diagnosis:

=> Operating instructions for vehicle diagnosis, Testing and Information system VAS 5051.

Special tools, workshop equipment, testers, measuring instruments and auxiliary items required

- -> VAS 5051 Vehicle diagnosis, Testing and Information system

satelettronica

Protected by copyright. Copying for private or commercial purposes, in part or in whole, is not permitted unless authorised by Volkswagen AG. Volkswagen AG does not guarantee or accept any liability with respect to the correctness of information in this document. Copyright by Volkswagen AG.

satelettronica

Test conditions

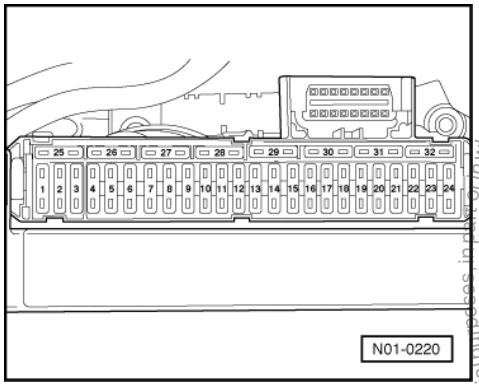

- -> The fuses 1, 2, 3, 4, 9,10 and 32 must be OK.
- The battery voltage must be at least 11.5 V.
- Earth connection between engine (on gearbox bell housing) and body (below battery) OK.

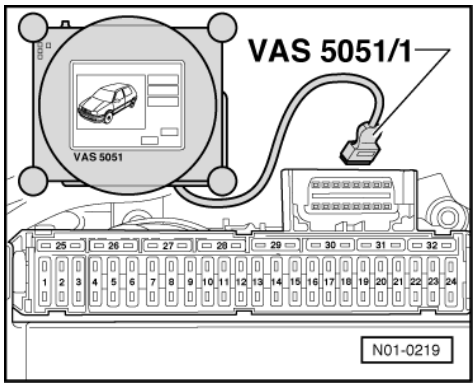

Work sequence

- Connect tester VAS 5051 with diagnosis cable VAS 5051/1 or VAS 5051/3 as follows:
- -> Pull off cover in left stowage compartment below the steering wheel.
- Fit diagnosis cable connector onto diagnosis connector.
- Depending upon desired function
  switch ignition on
  or
  start engine and run at idling speed. Selectable functions => Page 2 .

Note:

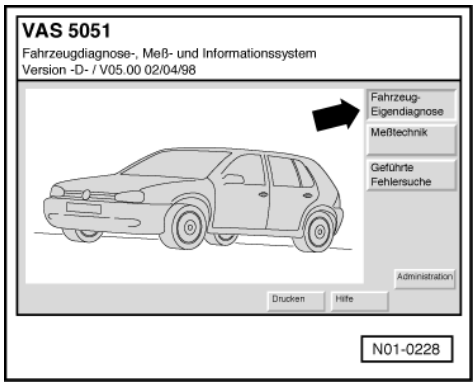

- The display fields will be displayed from top to bottom in functions 04 - Basic settings or 08 - Read data block.
- If the display does not indicate as described in the work sequence:

=> Operating instructions for Vehicle Diagnosis, Testing and Information System VAS 5051.

-> Indicated on display:

Selecting operating mode:

- Press key 1 for "Rapid data transfer".

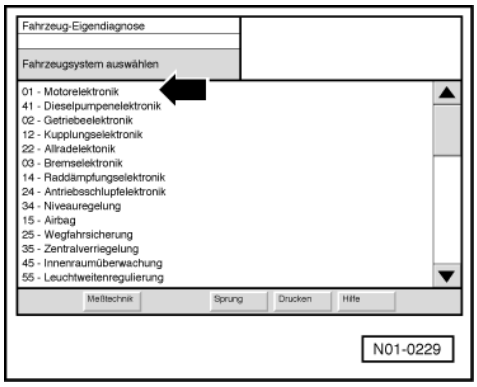

-> Indicated on display:

Selecting vehicle system:

- Press "01 - Engine electronics" on display -arrow-.

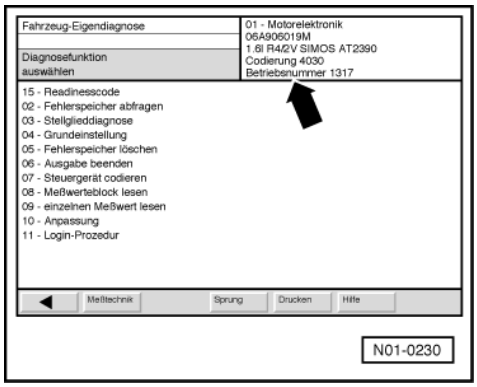

-> The control unit identification and coding -arrow- is shown on display e.g.:

Note:

Replace control unit if the control version displayed does not correspond to the vehicle

=> Page 97 .

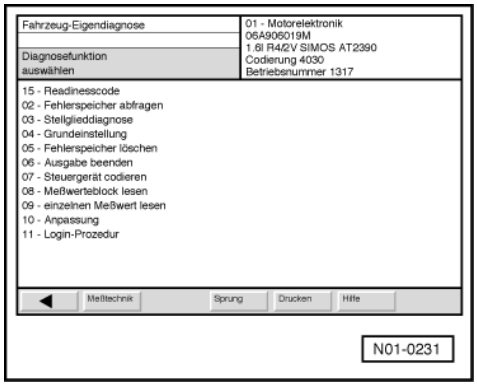

Protected by copyright. Copying for private or commercial purposes, in part or in whole, is not permitted unless authorised by Volkswagen AG. Volkswagen AG does not guarantee or accept any liability with respect to the correctness of information in this document. Copyright by Volkswagen AG.
satelettronica

-> Indicated on display:

Selecting diagnosis function:

At this point all diagnosis functions are available.

- Press desired function on display.
- Further measures see repair procedures.

2 - Fault memory

2.1 - Fault memory

2.2 - Interrogating and erasing fault memory

Special tools, workshop equipment, testers, measuring instruments and auxiliary items required

- Fault reader V.A.G 1551 or vehicle system tester V.A.G 1552 with cable V.A.G 1551/3

Work sequence

- Connect fault reader V.A.G 1551 (V.A.G 1552). Start engine and select "Address word" 01 of engine control unit. When doing this the engine must be running at idling speed.
  (Connecting fault reader and selecting engine control unit => Page 2 .)

Only when engine does not start:

- Operate starter for approx. 6 seconds and then do not switch off the ignition.

- Switch on fault reader printer with the print key. The warning lamp in key must light up.

-> Indicated on display:

```
Rapid data transfer      HELP
Select function XX
```

- Operate fault reader taking into account the information on the display:
- Press keys 0 and 2 for function "Interrogate fault memory" and confirm entry with Q key.

-> The number of faults stored or "No fault recognised!" will be shown on the display.

```
X Faults recognised!
```

If no fault is stored:

- Press ⇒key.

If one or more faults are stored:

The stored faults will be displayed and printed out one after the other.

-> After the stored faults have been printed out, the display will show:

```
Rapid data transfer      HELP
Select function XX
```

- Press keys 0 and 5 for the function "Erase fault memory" and confirm entry with Q key.

-> Indicated on display:

Protected by copyright. Copying for private or commercial purposes, in whole or in part, is not permitted unless authorised by Volkswagen AG. Volkswagen AG does not guarantee or accept any liability with respect to the correctness of information in this document. Copyright by Volkswagen AG.
satelettronica

```
Rapid data transfer
Fault memory is erased!
```

Note:

If the ignition is switched off between "Interrogate fault memory" and "Erase fault memory" the fault memory will not be erased.

- Press ⇒key.

-> Indicated on display:

```
Rapid data transfer     HELP
Select function XX
```

- Press keys 0 and 6 for the function "End output" and confirm entry with the Q key.

-> Indicated on display:

```
Rapid data transfer     HELP
Select function XX
```

- Switch off ignition.
- Rectify the faults printed out using the fault table:
  Fault code 00263...00524 => Page 13 .

Automatic test sequence

During test and assembly work faults can be recognised from other control units like e.g. plug disconnected. Therefore, on completion, the fault memories of all control units must be interrogated and erased. To do this:

- Press key 0 twice for address word "Automatic test sequence" and confirm entry with Q key. The V.A.G 1551 transmits all known address words one after the other.

When a control unit answers with its identification the number of stored faults appears on the display or "No fault recognised".

Any system faults that are stored will be displayed one after the other and printed out. The V.A.G 1551 will then transmit the next address word.

-> The automatic test sequence has ended when following is indicated on display:

```
Rapid data transfer     HELP
Enter address word XX
```

- Erase all fault memories and then carry out a road test.

  During the road test the following operating conditions must be fulfilled:
  - The coolant temperature must exceed 80 °C .
  - When the temperature is reached, the operating conditions
    Idling
    Part throttle
    Full throttle
    Overrun
    must be attained several times.
  - At full throttle the speed must exceed 3500 rpm.

- Again interrogate the fault memories of all control units using the "automatic test sequence".

If no fault is stored:

- Press the ⇒key.
- Press keys 0 and 6 for the function "End output" and confirm entry with the Q key.

-> Indicated on display:

Protected by copyright. Copyright by Volkswagen AG. Volkswagen AG does not guarantee or accept any liability with respect to the correctness of information in this document. Copyright by Volkswagen AG. Protected by copyright. Copying for private or commercial purposes, in part or in whole, is not permitted unless authorised by Volkswagen AG.
satelettronica

```
Rapid data transfer      HELP
Select function XX
```

- Switch off ignition.

Note:

If the self-diagnosis has not detected a fault, use the appropriate fault table in "Fault finding engine" binder for further fault finding.

3 - Fault table, fault codes 00263...00524

3.1 - Fault table, fault codes 00263...00524

Notes:

- Explanation of the fault types (e.g. "open circuit/short circuit to earth"):

=> Fault reader operating instructions

- If components are indicated as faulty:
  First check the wiring and connectors to these components as well as the system earth connections according to current flow diagram. This is particularly relevant if faults are output as "occurring sporadically" (SP).

V.A.G 1551 print out, e.g.:

00523 030

Intake air temperature sender -G42

Short to earth

Sporadically occurring fault

Explanation:

- 00523 = Fault code
- 030 = Fault type as number
- Intake air temperature sender -G42 = Faulty current path or incorrect location
- Short to earth = Fault type as text
- Sporadic faults = Faults that are not always present e.g. loose contact

V.A.G 1551 print-out	Possible causes of fault	Possible effects	Fault remedy
00263 Gearbox Signal too large	- Short to positive in wiring from engine control unit to automatic gearbox control unit	- See Workshop Manual automatic gearbox: => Self-diagnosis for automatic gearbox 01M; Repair group 01; Performing self-diagnosis; fault table Performing self-diagnosis; fault table	- Interrogate fault memory of automatic gearbox control unit: => Self-diagnosis for automatic gearbox 01M; Repair group 01; Performing self-diagnosis; Interrogating fault memory Performing self-diagnosis; Interrogating fault memory

Protected by copyright. Copyright by Volkswagen AG.
Copyright by Volkswagen AG. Volkswagen AG does not guarantee or accept any liability with respect to the correctness of information in this document. Copying for private or commercial purposes, in part or in whole, is not permitted unless authorised by Volkswagen AG.
satelettronica

V.A.G 1551 print-out	Possible causes of fault	Possible effects	Fault remedy
	- Engine control unit input signal defective (engine control unit defective)		- Replace engine control unit =>Page 97 .

V.A.G 1551 print-out	Possible causes of fault	Possible effects	Fault remedy
00281 Road speed sender -G68 Implausible signal	- No signal from speedometer (G21) or speedometer sender (G22) - Wiring open circuit - Loose contact or corrosion due to moisture in connector	- Speedometer not functioning	- Check speed signal =>Page 101

V.A.G 1551 print-out	Possible causes of fault	Possible effects	Fault remedy
00282 Throttle valve positioner -V601) Short to earth	- Wiring short to earth - -V60 defective/sticking in closed position	- Cold starting problems - Cold idling problems - Load change jolt when decelerating - Mechanical emergency running - Idling problems	- Check V60 =>Page 59 , Checking throttle valve control part
Short to positive	- Wiring short to positive - -V60 defective/sticking in open position		
Output open	- Wiring open circuit - -V60 defective		
	- Engine control unit signal output defective (engine control unit defective)		- Replace engine control unit =>Page 97 .

1) The throttle valve positioner (V60) is a component of the throttle valve control part (J338).

V.A.G 1551 print-out	Possible causes of fault	Possible effects	Fault remedy
00305 Fuel consumption indicator signal Short to positive	- Short to positive in wiring between engine control unit and on-board computer	- No fuel consumption indicator in on-board computer	Check signal for fuel consumption indicator => Current flow diagrams, Electrical fault finding and Fitting locations binder
Short to earth	- Short to earth in wiring between engine control unit and on-board computer		

V.A.G 1551 print-out	Possible causes of fault	Possible effects	Fault remedy
00513 Engine speed sender -G28			

satelettronica
Protected by copyright. Copying for private or commercial purposes, in part or in whole, is not permitted unless authorised by Volkswagen AG. Volkswagen AG does not guarantee or accept any liability with respect to the correctness of information in this document. Copyright by Volkswagen AG.

V.A.G 1551 print-out	Possible causes of fault	Possible effects	Fault remedy
No signal	- Signal wire has an open circuit or short to earth or short to positive - Earth wire has open circuit or short to positive - Open circuit in the screening from -G28 - -G28 defective - Metal particles on engine speed sender -G28 - Gap between -G28/sender wheel too large	- The engine will no longer rev to the governed speed (governed speed at approx. 5700 rpm) - Reduced performance - When cold the engine will not start or is difficult to start (cold starting problems) - The engine will not start when hot or is difficult to start (hot starting problems)	- Check G28 =>Page 75
Continued on next page			

V.A.G 1551 print-out	Possible causes of fault	Possible effects	Fault remedy
00513 Engine speed sender -G28 No signal	- Sender wheel loose	- Engine misfiring	- Check sender wheel: => Repair group 13; Dismantling and assembling engine; Removing and installing cylinder block, sealing flanges and pressure plate/drive plate
	- Engine control unit signal output defective (engine control unit defective)		- Replace engine control unit =>Page 97 .

Notes on fault code 00513:

- Metal particles can cause additional signals to be generated.
- Signals may not be generated or be too small and therefore not recognised if the sender gap to sender wheel is too large or the sender wheel is damaged.
- The signals can be irregular if the sender wheel is loose.
- Interference signals can cause additional signals to be recognised.

V.A.G 1551 print-out	Possible causes of fault	Possible effects	Fault remedy
00515 Hall sender -G40 Open circuit/short to positive	- Wiring open circuit or short to positive - -G40 defective	- Engine has no power at full throttle - Emission values not OK - Higher fuel consumption - Engine does not start or is difficult to start when cold (cold starting problems)	- Check G40 =>Page 114
Short to earth	- Short to earth - -G40 defective		
Implausible signal	- Loose contact or corrosion due to moisture in connector - -G40 defective		

V.A.G 1551 print-out	Possible causes of fault	Possible effects	Fault remedy
00516 Idling switch -F601) Implausible signal	- Loose contact or corrosion due to moisture in connector - F60 defective	- Idling problems - Engine running problems when driving off - Load change jolt when decelerating	- Adapt engine control unit to the throttle valve control part =>Page 59 , check throttle valve control part

Protected by copyright. Copyright by Volkswagen AG. Volkswagen AG does not guarantee or accept any liability with respect to the correctness of information. Copyright by Volkswagen AG. Reproduction prohibited. Use for private or commercial purposes is prohibited.
satelettronica

V.A.G 1551 print-out	Possible causes of fault	Possible effects	Fault remedy
	- Throttle valve sticking - Accelerator cable adjustment - Floor mat pressing on accelerator pedal		- Check accelerator cable adjustment: => Repair group 20; Accelerator mechanism; Adjusting accelerator cable Adjusting accelerator cable
	- Engine control unit input signal defective (engine control unit defective)		- Replace engine control unit =>Page 97 .

1) The idling speed switch (F60) is a component of the throttle valve control part (J338).

V.A.G 1551 print-out	Possible causes of fault	Possible effects	Fault remedy
00518 Throttle valve potentiometer -G691) Short to earth	- Wiring short to earth - -G69 defective	- Slight misfiring when accelerating - Load change jolt when decelerating - Increased emission values - No full throttle recognition	- Adapt engine control unit to throttle valve control part =>Page 59 , checking throttle valve control part
Open circuit/short to positive	- Wiring open circuit or short to positive - -G69 defective		

2) The throttle valve potentiometer (G69) is a component of the throttle valve control part (J338).

V.A.G 1551 print-out	Possible causes of fault	Possible effects	Fault remedy
00519 Intake manifold pressure sender - G71 Short to positive	- Wiring short to positive - -G71 defective	- Increased emission values - Load change jolt when decelerating - Hard load change	- Check G71 =>Page 67
Open circuit/short to earth	- Wiring open or short circuit to earth - -G71 defective		
Implausible signal	- Loose contact or corrosion due to moisture in connector - -G71 defective		

V.A.G 1551 print-out	Possible causes of fault	Possible effects	Fault remedy
00522 Coolant temperature sender - G62 Short to earth	- Wiring short to earth - -G62 defective	- Poor cold starting - Poor hot starting - No idling speed adaption - Increased emission values - Increased fuel consumption	- Check G62 =>Page 73
Open circuit/short to positive	- Wiring open circuit or short to positive - -G62 defective		

V.A.G 1551 print-out	Possible causes of fault	Possible effects	Fault remedy
00523			

Protected by copyright. Copyright by Volkswagen AG. Volkswagen AG does not accept any liability with respect to the correctness of information in this document. Copyright by Volkswagen AG. Reproduction, distribution and communication to third parties, in part or in whole, not permitted unless authorised by Volkswagen AG.
satelettronica

V.A.G 1551 print-out	Possible causes of fault	Possible effects	Fault remedy
Intake air temperature sender - G42 Short to earth	- Wiring short to earth - -G42 defective	- Poor hot starting - Increased emission values - Poor acceleration when cold and during warm-up phase, progression problems - Rough idling or no idling when cold or during the warm-up phase	- Check G42 =>Page 70
Open circuit/short to positive	- Wiring open circuit or short to positive - -G42 defective		

V.A.G 1551 print-out	Possible causes of fault	Possible effects	Fault remedy
00524 Knock sensor 1 -G61 Short to earth	- Wiring short to earth - -G61 defective	- Reduced power - Increased fuel consumption	- Check G61 => Page 119
Short to positive	- Wiring short to positive - -G61 defective		
Open circuit	- Wiring open circuit - -G61 defective		
Signal too small	- Wiring open circuit or short to earth - -G61 defective		
Continued on next page			

V.A.G 1551 print-out	Possible causes of fault	Possible effects	Fault remedy
00524 Continued Knock sensor 1 -G61 Implausible signal	- Knock sensor loose - Wiring open circuit or short to positive or short to earth or to signal wire screening between knock sensor and engine control unit - Loose contact or corrosion due to moisture in connector - Loose assemblies, causing the knock sensor to recognise additional signals (vibrations) - -G61 defective	- Reduced power - Increased fuel consumption	- Check G61 => Page 119

4 - Fault table, fault codes 00525...17978

4.1 - Fault table, fault codes 00525...17978

Notes on fault table =>Page 9

V.A.G 1551 print-out	Possible causes of fault	Possible effects	Fault remedy
00525 Lambda probe -G39			

satelettronica
Protected by copyright. Copying for private or commercial purposes, in any form or medium, is not permitted unless authorised by Volkswagen AG. Volkswagen AG does not guarantee or accept any liability with respect to the correctness of information in this document. Copyright by Volkswagen AG.

V.A.G 1551 print-out	Possible causes of fault	Possible effects	Fault remedy
Short to positive	- Wiring short to positive - -G39 defective	- No Lambda control - Rough idling - Increased fuel consumption - Spark plugs sooted - Emission values not OK	- Check Lambda probe and Lambda control =>Page 91
Signal too large	- -G39 defective		
Signal too small	- Wiring short to earth - -G39 defective		

V.A.G 1551 print-out	Possible causes of fault	Possible effects	Fault remedy
00530 Throttle valve positioner/potentiometer -G881)			
Open circuit/short to positive	- Wiring open circuit or short to positive - -G88 defective	- Cold starting problems - Cold idling problems - Idling speed not within tolerance - Rough idling - Load change jolt when decelerating	- Adapt engine control unit to throttle valve control part =>Page 59 , checking throttle valve control part
Short to earth	- Wiring short to earth - -G88 defective		

1) The throttle valve positioner/potentiometer (G88) is a component of the throttle valve control part (J338).

V.A.G 1551 print-out	Possible causes of fault	Possible effects	Fault remedy
00532 Supply voltage			
Signal too large	- Voltage supply above - 16 V (alternator defective) - Excessive voltage caused by jump starting	- Engine control unit damaged	- Check alternator: => Current flow diagrams, Electrical fault finding and Fitting locations binder
Signal too small	- Voltage supply less than 10 V - Engine control unit has poor earth connection - Battery discharged - Current draw when ignition is off	- Idling speed not in specified range	- Check engine control unit voltage supply => Page 95 Check charge state of battery
		- Engine control unit learnt values are lost	- Adapt engine control unit to throttle valve control part => Page 98 .

Note to fault code 00532:

- If the fault is indicated as a sporadic fault, ignore the fault information! This fault can be stored when the engine is running for a long time at idling with lots of electrical consumers switched on and the battery is heavily discharged.
- The fault type "Signal too small" will be stored 60 seconds after starting if the voltage supply drops below 10.08 V for longer than 2 seconds (the control unit will not function below 6.0 V).
- Voltage supply is not checked when starting engine.

V.A.G 1551 print-out	Possible causes of fault	Possible effects	Fault remedy
00543 Maximum revs exceeded			

Protected by copyright. Copying for private or commercial purposes, in part or in whole, is not permitted unless authorised by Volkswagen AG. Volkswagen AG does not guarantee or accept any liability with respect to the correctness of information in this document. Copyright by Volkswagen AG.
satelettronica

V.A.G 1551 print-out	Possible causes of fault	Possible effects	Fault remedy
Signal too large	- Speed was above 6200 rpm (e.g. missed gear)	- Possible damage to valves and pistons (contact)	- Check engine for damage and erase fault memory => Page 7 , interrogating and erasing fault memory

V.A.G 1551 print-out	Possible causes of fault	Possible effects	Fault remedy
00609 Ignition output 1 Short to positive	- Wiring short to positive - -G152 defective	- Engine will not start	- Check ignition transformer =>Page 115
Short to earth	- Wiring short to earth - -G152 defective		
Output open	- Wiring open circuit - -G152 defective		
	- Engine control unit signal output defective (engine control unit defective)		- Replace engine control unit =>Page 97 .

V.A.G 1551 print-out	Possible causes of fault	Possible effects	Fault remedy
00610 Ignition output 2 Short to positive	see fault code 00609, ignition output 1, relating to ignition output 2		
Short to earth			
Output open			

Note on fault codes 00609 and 00610:

Ignition outputs 1 and 2 are the outputs on the engine control unit via which the engine control unit activates the ignition transformer.

V.A.G 1551 print-out	Possible causes of fault	Possible effects	Fault remedy
00638 Engine/gearbox electrical connection 2 Short to positive	- Short to positive in the wiring from engine control unit to automatic gearbox control unit	- See Workshop Manual automatic gearbox: => Automatic gearbox 01M self-diagnosis; Repair group 01; Performing self-diagnosis; fault table Performing self-diagnosis; fault table	- Interrogate automatic gearbox control unit fault memory: => Automatic gearbox 01M self-diagnosis; Repair group 01; Performing self-diagnosis; Interrogating fault memory Performing self-diagnosis; Interrogating fault memory
Short to earth	- Short to earth in the wiring from engine control unit to automatic gearbox control unit		

V.A.G 1551 print-out	Possible causes of fault	Possible effects	Fault remedy
00653 Plausibility selector lever/gearbox			

Protected by copyright. Copyright by Volkswagen AG. Volkswagen AG does not guarantee or accept any liability with respect to the correctness of information in this document. Copyright by Volkswagen AG. Protected by copyright. Copying for private or commercial purposes, in part or in whole, is not permitted unless authorised by Volkswagen AG.
satelettronica

V.A.G 1551 print-out	Possible causes of fault	Possible effects	Fault remedy
Implausible signal	- Wiring from engine control unit to automatic gearbox control unit - Loose contact or corrosion due to moisture in connector	- Engine running problems (gear shift jerk, load change jolt) - Idling speed not within tolerance range - Idling speed fluctuates	- Check driving range signal =>Page 104

Note on fault code 00653:

On vehicles with an automatic gearbox the engine control unit recognises whether a gear is engaged.

V.A.G 1551 print-out	Possible causes of fault	Possible effects	Fault remedy
00792 Air conditioner pressure switch -F129 Short to positive	- Wiring short to positive - -F129 defective	- See Workshop Manual heating, air conditioning: => Heating, air conditioning; Repair group 01; Self-diagnosis of Climatronic; fault table Self-diagnosis of Climatronic; fault table	- Interrogate the air conditioning/heating electronics fault memory: => Heating, air conditioning; Repair group 01; Self-diagnosis of Climatronic; Interrogating fault memory 02 Self-diagnosis of Climatronic; Interrogating fault memory 02
Open circuit/short to earth	- Wiring open circuit or short to earth - -F129 defective		
Signal too large	- -F129 defective		
Signal too small	- Wiring short to earth - -F129 defective		

V.A.G 1551 print-out	Possible causes of fault	Possible effects	Fault remedy
01087 Basic setting not carried out	- Supply voltage between throttle valve control unit and engine control unit has been interrupted - Throttle valve control part has been removed and installed - Throttle valve control part and/or engine control unit or engine have been replaced	- Engine will not start - Idling speed not within tolerance range - Idling speed fluctuates	- Adapt engine control unit to throttle valve control part => Page 59 , checking throttle valve control part
	- Adapting the engine control unit to the throttle valve control part was interrupted. The cause of this could be that e.g. the starter or the accelerator pedal was operated during the adaption procedure.		- Repeat the adaption of engine control unit to the throttle valve control part => Page 98 , adapting engine control unit to throttle valve control part

V.A.G 1551 print-out	Possible causes of fault	Possible effects	Fault remedy
01126 Engine speed signal Short to positive	- Wiring open circuit or short to positive	- Rev. counter does not operate	- Check speed signal => Page 19 , final control diagnosis

Copyright by Volkswagen AG. Volkswagen AG does not give any warranty or accept any liability with respect to the correctness of information in this document. Copying for private or commercial purposes, in part or in whole, is not permitted unless authorised by Volkswagen AG.
satelettronica

V.A.G 1551 print-out	Possible causes of fault	Possible effects	Fault remedy
Short to earth	- Wiring short to earth		

V.A.G 1551 print-out	Possible causes of fault	Possible effects	Fault remedy
01180 Engine/gearbox electrical connection			
Short to positive	- Short to positive in the wiring from engine control unit to air conditioner compressor	- Air conditioning system/A/C compressor does not function	- Check engine/air conditioner compressor electrical connection =>Page 19 , final control diagnosis
Short to earth	- Short to earth in the wiring from engine control unit to air conditioner compressor		
Output open	- Wiring open circuit between engine control unit and air conditioner compressor		
	- Engine control unit signal output defective (engine control unit defective)		- Replace engine control unit =>Page 97 .

V.A.G 1551 print-out	Possible causes of fault	Possible effects	Fault remedy
01247 Activated charcoal filter solenoid valve 1 -N80			
Short to earth	- Wiring short to earth - -N80 defective	- Possible jerking in part throttle range - It is possible that the vehicle smells of fuel	- Check N80 => Page 19 , final control diagnosis
Short to positive	- Wiring short to positive - -N80 defective		
Output open	- Wiring open circuit - Supply voltage for N80 defective - -N80 defective		
	- Engine control unit signal output defective (engine control unit defective)		- Replace engine control unit =>Page 97 .

V.A.G 1551 print-out	Possible causes of fault	Possible effects	Fault remedy
01249 No.1 cyl. injector -N30 Short to positive	- Short to positive in the wiring between injector and engine control unit - Injector defective	- Engine runs rough/stalls - Increased emission values - Poor starting characteristics - Engine running problems - Poor acceleration - Rough idling	- Check injectors =>Page 77
Short to earth	- Short to earth in the wiring between injector and engine control unit - Injector defective		

Copyright by Volkswagen AG. Volkswagen AG does not guarantee or accept any liability with respect to the correctness of information in this document. Copyright by Volkswagen AG. Copying for private or commercial purposes, in part or in whole, is not permitted unless authorised by Volkswagen AG.

satelettronica

V.A.G 1551 print-out	Possible causes of fault	Possible effects	Fault remedy
Output open	- Voltage supply for injector defective		
	- Engine control unit signal output defective (engine control unit defective)		- Replace engine control unit =>Page 97 .

V.A.G 1551 print-out	Possible causes of fault	Possible effects	Fault remedy
01250 No. 2 cyl. injector -N31 Short to positive	see fault code 01249, No. 1 Cyl., but for N31		
Short to earth			
Output open			
01251 No. 3 cyl. injector -N32 Short to positive	see fault code 01249, No. 1 Cyl., but for N32		
Short to earth			
Output open			

V.A.G 1551 print-out	Possible causes of fault	Possible effects	Fault remedy
01252 No. 4 cyl. injector -N33 Short to positive	see fault code 01249, No. 1 Cyl., but for N33		
Short to earth			
Output open			

V.A.G 1551 print-out	Possible causes of fault	Possible effects	Fault remedy
01259 Fuel pump relay -J17 Short to positive	- Short to positive in the wiring between J17 and engine control unit - -J17 defective	- Engine starts briefly and then stalls again - Engine will not start	- Check -J17 =>Page 19 , final control diagnosis
Short to earth	- Short to earth in the wiring between J17 and engine control unit - J17 defective		
Output open	- Voltage supply for J17 defective		
	- Engine control unit signal output defective (engine control unit defective)		- Replace engine control unit =>Page 97 .

Note on fault code 01259:

If the fault "01259" is stored the faults "01247, 01249...01252 could also be stored as these components are supplied with voltage via the fuel pump relay.

V.A.G 1551 print-out	Possible causes of fault	Possible effects	Fault remedy
01437 Control position not learnt			

Protected by copyright. Copying for private or commercial purposes, in part or in whole, is not permitted unless authorised by Volkswagen AG. Volkswagen AG does not guarantee or accept any liability with respect to the correctness of information in this document. Copyright by Volkswagen AG.
satelettronica

V.A.G 1551 print-out	Possible causes of fault	Possible effects	Fault remedy
Adaption not occurred	- -Idling switch (F60)1) defective - -Throttle valve positioner (V60)1) defective - -Throttle valve potentiometer (G69)1) defective - -Throttle valve positioner/potentiometer (G88)1)defective - -Throttle valve control part (J238) defective	- Cold starting problems - Cold idling problems - Hard load change - Idling problems - Engine running problems when driving off - Poor acceleration - Hard load change - No full throttle recognition - Increased emission values	- Adapt the engine control unit to the throttle valve control part => Page 59

1) Idling switch (F60), throttle valve positioner (V60), throttle valve potentiometer (G69) and throttle valve positioner/potentiometer (G88) are components of the throttle valve control part (J338).

V.A.G 1551 print-out	Possible causes of fault	Possible effects	Fault remedy
17978 Engine control unit blocked	- Start attempted with a non-authorised key. - Attempted manipulation - Short in communication wire - Fault in immobilizer system - Immobilizer control unit defective/missing - Engine control unit has been replaced and not adapted to the immobilizer	- Engine starts briefly and then stops again	- Adapt engine control unit to electronic immobilizer => Page 100 Check electronic immobilizer: => Repair group 96; Servicing electronic immobilizer

Note to fault code 17978:

The control electronics for the immobilizer are located inside the dash panel insert and cannot be replaced separately.

If starting is attempted with an unauthorised key a permanent fault will be stored. After a subsequent start with an authorised key the fault will be converted to a sporadic fault.

5 - Final control diagnosis

5.1 - Final control diagnosis

5.2 - Performing final control diagnosis

The final control diagnosis activates the following components in the stated sequence:

1. Throttle valve positioner (V60)

2. Activated charcoal filter solenoid valve 1 (N80)

3. Exhaust gas recirculation valve (N18)1)

4. Engine speed signal

5. Fuel pump relay (J17)

Protected by copyright. Copying for private or commercial purposes, in part or in whole, is not permitted unless authorised by Volkswagen AG. Volkswagen AG does not guarantee or accept any liability with respect to the correctness of information in this document. Copyright by Volkswagen AG.
satelettronica

6. Engine/air conditioner compressor electrical connection

1) not relevant

Special tools, workshop equipment, testers, measuring instruments and auxiliary items required

- Fault reader V.A.G 1551 or vehicle system tester V.A.G 1552 with cable V.A.G 1551/3
- Test box V.A.G 1598/22
- Hand multimeter V.A.G 1526 or multimeter V.A.G 1715
- Diode test lamp V.A.G 1527
- Adapter set V.A.G 1594
- Current flow diagram

Check conditions

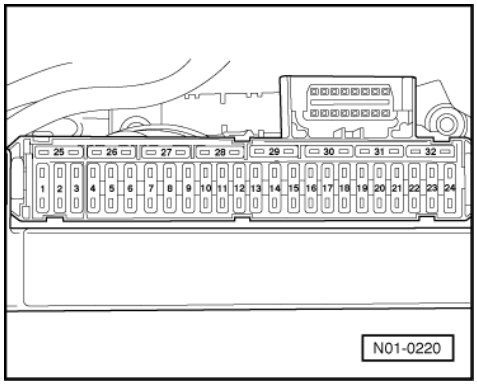

- -> The fuses 1, 2, 3, 4, 9,10 and 32 must be OK.
- The battery voltage must be at least 11.5 V.
- All electrical consumers, e.g. lights and rear window heating must be switched off.
- Throttle valve potentiometer (G69) OK.

Test requirements for vehicles with air conditioning system

- Vehicle at room temperature (warmer than + 15 °C)
- Air conditioning system switched on
- Select lowest temperature and highest blower speed

Notes:

- The final control diagnosis can only be carried out if the engine is stationary and ignition switched on.
- The final control diagnosis will be aborted if the engine is started or a rotational impulse is recognised.
- During the final control diagnosis the individual final controls will be activated until advancing to the next final control by pressing the ⇒ button.
- The final controls are checked acoustically or by touching.

Work sequence

- Connect fault reader V.A.G 1551 (V.A.G 1552). Start engine and select "Address word" 01 of engine control unit. When doing this the engine must be running at idling speed.
  (Connecting fault reader and selecting engine control unit => Page 2 .)

-> Indicated on display:

```
Rapid data transfer      HELP
Select function XX
```

- Operate fault reader taking into account the information on the display:
- Press keys 0 and 3 for the function "Final control diagnosis".

-> Indicated on display:

```
Rapid data transfer      Q
03 Final control diagnosis
```

satelettronica
Protected by copyright. Copying for private or commercial purposes, in whole, is not permitted unless authorised by Volkswagen AG. Volkswagen AG does not guarantee or accept any liability with respect to the correctness of information in this document. Copyright by Volkswagen AG.

Activating throttle valve positioner (V60):

- Confirm input with Q key.

-> Indicated on display:

```
Final control diagnosis
Throttle valve positioner-V60
```

The throttle valve positioner must open and close the throttle valve until switching to the next final control by pressing the ⇒key.

If the throttle valve positioner does not move:

- Check throttle valve positioner
  =>Page 59 , checking throttle valve control part.

Activating activated charcoal filter solenoid valve 1 (N80):

- Press ⇒key.

-> Indicated on display:

```
Final control diagnosis
Activ. charcoal filter solenoid valve
1     -N80
```

The activated charcoal filter solenoid valve 1 (in engine compartment, right, in activated charcoal filter) must click until the next final control is activated by pressing ⇒key.

If the solenoid valve does not click:

- Continue check => Page 22 .

Displaying engine speed signal:

Note:

The test is only possible for vehicles with a rev. counter. On vehicles without rev. counter switch to the next final control by pressing the ⇒ key.

- Press ⇒key.

-> Indicated on display:

```
Final control diagnosis
Engine speed signal
```

The rev. counter must display approx. 3000 rpm, until next final control element is activated by pressing the ⇒key.

If no display appears:

- Check the wiring to rev counter
  =>Page 105 , checking rpm signal.

Activating fuel pump relay (J17):

- Press ⇒key.

-> Indicated on display:

```
Final control diagnosis
Fuel pump relay J17
```

The fuel pump relay (on the relay plate with fuse box, relay position 4) must click until the next final control is activated by pressing the ⇒key.

Protected by copyright. Copying for private or commercial purposes, in part or in whole, is not permitted unless authorised by Volkswagen AG. Volkswagen AG does not guarantee or accept any liability with respect to the correctness of information in this document. Copyright by Volkswagen AG.
satelettronica

Protected by copyright. Copying for private or commercial purposes, in part or in whole, is not permitted unless authorised by Volkswagen AG. Volkswagen AG does not guarantee or accept any liability with respect to the correctness of information in this document. Copyright by Volkswagen AG.

Note:

During the activation of the fuel pump relay the fuel pump must be heard to run at intervals.

If the relay does not click:

- Check fuel pump relay:

=> Current flow diagrams, Electrical fault finding and Fitting locations

Checking electric wiring to air conditioner:

Note:

The test step is only for vehicles with air conditioner. On vehicles without air conditioner end final control diagnosis by pressing ⇒key.

-> Indicated on display:

```
Final control diagnosis
Engine/air cond. compr. electr.
connection
```

The air conditioner compressor magnetic coupling must click, until ending final control diagnosis by pressing ⇒key.

If the magnetic coupling does not click:

- Check wiring from / to air conditioner
  =>Page 102

If the magnetic coupling clicks:

- Press ⇒key.

-> Indicated on display:

```
Rapid data transfer      HELP
Select function XX
```

- Press keys 0 and 6 for the "End output" function and confirm input with the Q key.
- Switch off ignition.

Continuation of check when the activated charcoal filter solenoid 1 does not click:

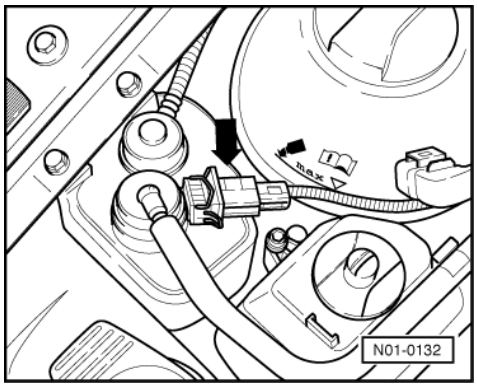

- -> Pull the 2 pin connector off solenoid valve 1 (N80) -arrow-.

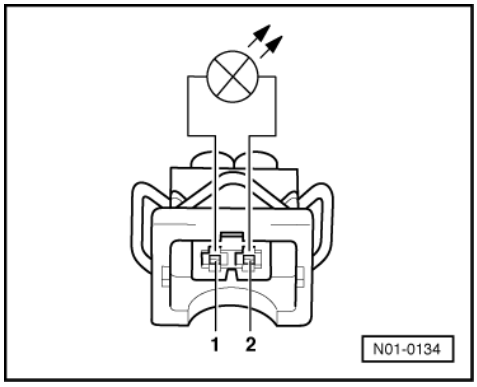

satelettronica

- -> Connect diode test lamp V.A.G 1527 using adapter cables from V.A.G 1594 to detached connector.
  The LED must flash (bright/darker)

LED flashes:

- Proceed with final control diagnosis until completed.
- Switch off ignition.
- Replace the activated charcoal filter together with solenoid valve 1 (N80):

=> Repair group 20; Activated charcoal filter system; Removing and installing parts of activated charcoal filter system Activated charcoal filter system Removing and installing parts of activated charcoal filter system

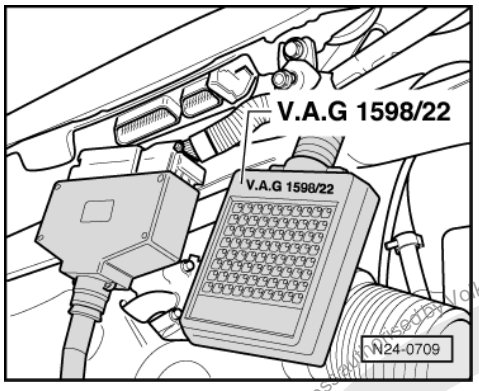

LED does not flash:

- Proceed with final control diagnosis until completed.
- Switch off ignition.
- Remove wiper arms and cowl panel:

=> Electrical system; Repair group 92; windscreen wiper system; removing and installing windscreen wiper system windscreen wiper system removing and installing windscreen wiper system

- -> Connect test box V.A.G 1598/22 to control unit wiring harness.

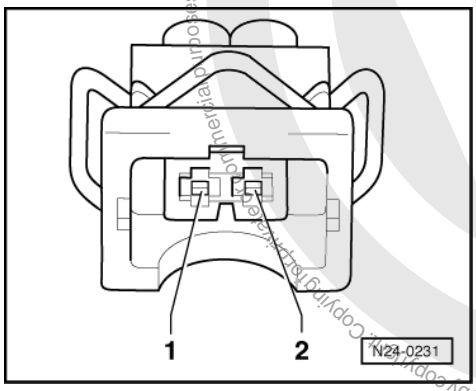

- -> Check wire for open circuit between test box sockets 15 and 2 pin connector contact 2 using current flow diagram.
  Wire resistance: max. 1.5 ω
- Additionally check wire for short to battery positive and earth.
  Specification: ∞ω
- Check wire between 2 pin connector contact 1 and the fuel pump relay (J17) for open circuit using current flow diagram.
  Wire resistance: max. 1.5 ω

If no wiring fault is detected:

- Replace engine control unit

Copyright by Volkswagen AG. Volkswagen AG does not guarantee or accept any liability with respect to the correctness of information in this document.
satelettronica

=> Page 97 .

6 - Measured value blocks

6.1 - Measured value blocks

6.2 - Safety precautions

Observe following if test and measuring instruments are required during a test drive:

- Test and measuring instruments must be secured to rear seat and operated by a 2nd person from this location.

  If test and measuring instruments are operated from front passenger's seat and the vehicle is involved in an accident, there is a possibility that the person sitting in this seat may receive serious injuries when the airbag is triggered.

6.3 - Read measured value block

The measured values in the functions read measured value block and basic setting are described during the individual component test. This table serves only as an overview.

Special tools, workshop equipment, testers, measuring instruments and auxiliary items required

- Fault reader V.A.G 1551 or vehicle system tester V.A.G 1552 with cable V.A.G 1551/3

Test conditions

- All electrical consumers, e.g. lights and rear window heating must be switched off.
- If the vehicle is equipped with an air conditioner, this must be switched off.
- On vehicles with automatic gearbox the selector lever must be in "P" or "N" position.
- No faults must be stored in fault memory => Page 7 , interrogating and erasing fault memory.
- Coolant temperature must be at least 85 °C, =>display group 1, display zone 2.

Work sequence

- Connect fault reader V.A.G 1551 (V.A.G 1552). Start engine and select "Address word" 01 of engine control unit. When doing this the engine must be running at idling speed.
  (Connecting fault reader and selecting engine control unit => Page 2 .)

-> Indicated on display:

```
Rapid data transfer     HELP
Select function XX
```

- Press keys 0 and 8 for the function "Read measured value block" and confirm entry with Q key.

-> Indicated on display:

```
Read measured value block     HELP
Input display group number XXX
```

- Select required display group number.

Copyright by Volkswagen AG. Volkswagen AG does not guarantee or accept any liability with respect to the correctness of information in this document. Copying for private or commercial purposes, in part or in whole, is not permitted unless authorised by Volkswagen AG.
satelettronica

Note:

The display group number 0 is an example, to illustrate the sequence.

- Press keys 0, 0 and 0 for "Display group number 0" and confirm entry with Q key.

-> Indicated on display:
(1...10 = Display zones)

```
Read measured value block     0
     1     2     3     4     5     6
7     8     9     10
```

Note:

To change to another display group proceed as follows:

Display group	V.A.G 1551	V.A.G 1552
Higher	Press key 3	Press ↑key
Lower	Press key 1	Press ↓key
Skip	Press key C	Press key C

- If the specifications in all display zones are obtained, press ⇒key.

-> Indicated on display:

```
Rapid data transfer     HELP
Select function XX
```

- Press keys 0 and 6 for the "End output" function and confirm input with the Q key.

-> Indicated on display:

```
Rapid data transfer     HELP
Select function XX
```

- Switch off ignition.

Note:

Measured value blocks which are not described in this chapter are currently only intended for the research and development and production. The values displayed are not relevant for service department fault finding.

6.4 - Evaluating measured value blocks

Display group 0 (decimal displayed value)												
▪ Engine running at idling speed												
Read measured value block 0										[Itrif] Indicated on display		
x	x	x	x	x	x	x	x	x	x			
1	2	3	4	5	6	7	8	9	10	[Itrif] Display zones	Specification	Corresponds to
										Engine speed (idling speed)	24...28	790...890 rpm1)
										Injection period	5...14	3.00...7.00 ms
										Throttle valve potentiometer voltage	200...240	4.0...4.5 V
										Ignore	0	0
										Lambda control	Not for Service department	Not for Service department
										Lambda probe voltage	0...184	0.00...0.90 V
										Intake manifold pressure	32...71	240...420 mbar
										Coolant temperature	37...18	80...110 °C

satelettronica
Protected by copyright. Copying for private or commercial purposes, in part or in whole, is not permitted unless authorised by Volkswagen AG. Volkswagen AG does not guarantee or accept any liability with respect to the correctness of information in this document. Copyright by Volkswagen AG.

Display group 0 (decimal displayed value)		
Battery voltage	120...160	12.0...14.5 V
Intake air temperature	156...44	15...70 °C

1) Up-to-date specifications:

=> Exhaust emissions test binder

Display group 1 -Basic functions-						
Read measured value block 1			⇒	[Itrif] Indicated on display		
xxxx rpm	xxx °C	x.xxx V	xxxxxxxx			
1	2	3	4	[Itrif] Display zones	Specification	Evaluation
				Adjustment conditions	00000000	=> Page 28
			Lambda probe voltage		0.000...0.900 V	=> Page 27
		Coolant temperature			85...110 °C	=> Page 27
	Engine speed (idling speed)				790...890 rpm1)	=> Page 26

1) Up-to-date specifications:

=> Exhaust emissions test binder

Note on display zone 1:

The idling speed will be increased by the control unit under the following conditions:

- When the battery voltage is too low: up to 900 rpm,

- After a long full throttle drive and high temperatures: up to 960 rpm.

Note on display zone 1:

The engine control unit will use the intake air temperature as a replacement value for an engine start (start temperature - replacement value) as soon as there is a fault stored in the fault memory, which affects the coolant temperature sender (G62). The temperature then rises according to a predetermined curve stored in the control unit.

Notes on display zone 3:

- The voltage signal "rich mixture (low level of residual oxygen)" is approx. 0.700...0.900 V.
- The voltage signal "lean mixture (high level of residual oxygen)" is approx. 0.000...0.300 V.
- When changing from "rich" to "lean" and back again (font=symbol charset=fontspecific code=108 TeX='\lambda ' descr='[lambda]' = 1.0) the voltage jump will change from 0.700...0.900 V to 0.000...0.300 V or back again.
- Due to the steep voltage jumps the Lambda control cannot keep the ideal mixture composition font=symbol charset=fontspecific code=108 TeX='\lambda ' descr='[lambda]' = 1.0 constant. The control fluctuates constantly between conditions "slightly too lean" and "slightly too rich".
- The displayed value must temporarily drop below 0.300 V and exceed 0.600 V. Displayed values below 0.450 V signifies lean, above 0.450 V rich.

Evaluating display group 1, display zone 1 - Engine speed (idling speed)

Appears on display	Possible fault cause	Fault elimination
Less than 790 rpm	- Throttle valve control part sticking or defective - Large amount of unmetered air (cannot be compensated for by the idling stabilisation)	- Check throttle valve control part => Page 59 - Check intake air system for leaks => Page 87
More than 890 rpm	- Idling switch not closed/defective - Large amount of unmetered air (cannot be compensated for by the idling stabilisation)	- Interrogate fault memory => Page 7 , interrogating and erasing fault memory - Check intake air system for leaks => Page 87

Protected by copyright. Copying for private or commercial purposes, in part or in whole, is not permitted unless authorised by Volkswagen AG. Volkswagen AG does not guarantee or accept any liability with respect to the accuracy of information/data/documents.
satelettronica

	- Throttle valve control part sticking/defective	- Check throttle valve control part => Page 59

Evaluating display group 1, display zone 2 - Coolant temperature

Appears on display	Possible fault cause	Fault elimination
Less than 85 °C	- Engine too cold - Coolant temperature sender or wiring to engine control unit	- If necessary carry out test drive - Check coolant temperature sender =>Page 73
More than 110 °C	- Radiator soiled - Radiator fan not functioning - Thermostat defective - Coolant temperature sender or wiring to engine control unit	- Clean radiator - Check function - Check thermostat => Repair group 19; Removing and installing parts of cooling system; Parts of cooling system engine side Parts of cooling system engine side - Check coolant temperature sender =>Page 73

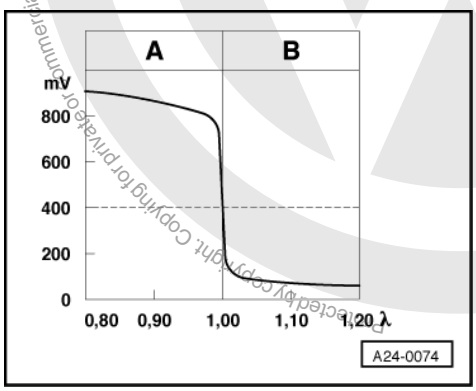

-> Lambda probe voltage Ufont=symbol charset=fontspecific code=108 TeX='\lambda ' descr='[lambda]' in mV

A: High Lambda probe voltage

- Rich mixture (excess of fuel or shortage of air)
- Higher CO value

B: Low Lambda probe voltage

- Lean mixture (shortage of fuel or excess air)
- Lower CO value

Evaluating display group 1, display zone 3 - Lambda probe voltage

Appears on display	Possible fault cause	Fault elimination
Display does not fluctuate (Constant 0.000... 0.300 V or Constant 0.700...1.100 V) Cont. on next page	- Large amount of unmetered air - Spark plug defective - Fuel pressure too low or too high	- Check air intake system for leaks =>Page 87 - Check spark plugs - Check fuel pressure regulator and holding pressure => Page 84

Appears on display	Possible fault cause	Fault elimination
Continued	- Injector defective	- Check injectors => Page 77

satelettronica

	- Coolant temperature sender defective - Activated charcoal filter solenoid valve 1 - Lambda probe heating not functioning - Lambda probe (s) defective or soiled	- Check coolant temperature sender =>Page 73 - Check solenoid valve 1 =>Page 19 , final control diagnosis - Check Lambda probe heating => Page 57 - Check Lambda probe and Lambda control => Page 91
Constant 1.170 V	- Short to positive via: - Lambda probe, probe wire, earth wire, engine control unit	- Check Lambda probe wiring => Page 91 , checking Lambda probe and Lambda control
Constant between 0.040...0.050 V	- Open circuit in: - Lambda probe, probe wire, earth wire, engine control unit	
Constant 0.000 V	- Short to earth via: - Lambda probe, probe wire, earth wire, engine control unit	

Significance of figures in 8 digit number block, display zone 4 - Adjustment conditions

X	X	X	X	X	X	X	X	Signifies
								Coolant temperature 0 = Coolant temperature above 80 °C 1 = Coolant temperature below 80 °C
								Engine speed 0 = Engine speed below 1800 rpm 1 = Engine speed above 1800 rpm
								Throttle valve 0 = Throttle valve closed 1 = Throttle valve open
								Lambda control 0 = Lambda control OK. 1 = Fault in the Lambda control
								Idling switch (F60) 0 = Idling switch closed 1 = Idling switch open
								Air conditioner compressor 0 = Air conditioner compressor switched off 1 = Air conditioner compressor switched on
								Gearbox intervention during gear shift 0 = No intervention 1 = Intervention

Copyright protected by Volkswagen AG. Volkswagen AG does not guarantee or accept any liability with respect to the correctness of information in this document. Copying for private or commercial purposes, in part or in whole, is not permitted unless authorised by Volkswagen AG.
satelettronica

Fault memory 0 = No fault stored in fault memory 1 = Fault stored in fault memory

Note on 4th and 6th position in 8 digit number block:

If a 1 is displayed here the fault can be that the accelerator cable is too taut.

Note on 5th position in 8 digit number block:

All faults will not be recognised by the self-diagnosis. If a 1 is shown here you must check the Lambda probe and Lambda control even if no fault is stored in the fault memory=>Page 91 .

Display group 2 -Basic functions-						
Read measured value block 2			⇒	[Itrif] Indicated on display		
xxxx rpm	xx.xx ms	xx.x V	xxx °C			
1	2	3	4	[Itrif] Display zones	Specification	Evaluation
				Intake air temperature	19.5 °C	---
				Supply voltage for engine control unit	11.5...14.5 V	=> Page 29
				Injection period (per Otto cycle)	2.56...5.12 ms	=> Page 29
				Engine speed (idling speed)	790...890 rpm1)	=> Page 26

1) Up-to-date specifications:

=> Exhaust emissions test binder

Note on display zone 1:

The idling speed will be increased by the control unit under the following conditions:

- When the battery voltage is too low: up to 900 rpm,

- After a long full throttle drive and high temperatures: up to 960 rpm.

Note on display zone 4:

As soon as a fault is stored in the fault memory which affects the intake air temperature sender (G42), the engine control unit will use a replacement value of 45 °C for the temperature value.

Evaluating display group 2, display zone 2 - Injection period (per Otto cycle)

Appears on display	Possible fault cause	Fault elimination
Less than 2.56 ms	- Large amount of fuel from the activated charcoal filter system - Incorrect injectors with greater throughput installed	- Check solenoid valve 1 => Page 19 , final control diagnosis - Check injectors => Page 77
More than 5.12 ms	- Increased engine load due to electric consumers, air conditioner, gear selected or P.A.S. steering on full lock	- Eliminate increased load (air conditioner, power assisted steering etc.)

Evaluating display group 2, display zone 3 - Control unit voltage supply

Appears on display	Possible fault cause	Fault elimination
Less than 11.5 V	- Generator defective, battery heavily discharged - Battery heavily loaded shortly after starting due to high charging current and current consumers	- Check voltage, charge battery - Increase revs slightly for a few minutes and switch off current consumers

Protected by copyright. Copyright by Volkswagen AG. Volkswagen AG does not guarantee or accept any liability with respect to the correctness of information in this document. Copyright by Volkswagen AG. Copying for private or commercial purposes, in part or in whole, is not permitted unless authorised by Volkswagen AG.
satelettronica

	- Transfer resistance in the current supply or the engine control unit earth connection - Current draw when ignition is off	- Check engine control unit voltage supply => Page 95 - Eliminate current draw
More than 14.5 V	- Voltage regulator in alternator defective - Excess voltage due to jump starting or quick charging unit	- Check voltage, replace regulator if necessary - Interrogate fault memory => Page 7 , interrogating and erasing fault memory

Display group 3 -Basic functions-						
Read measured value block 3 ⇒				[Itrif] Indicated on display		
xxxx rpm	xxx %	xxx <°	xxx.x %			
1	2	3	4	[Itrif] Display zones	Specification	Evaluation
				Throttle valve positioner duty cycle	Not for Service department	---
			Throttle valve angle		1...7 <°	=> Page 30
		Engine load			12...40 %	=> Page 30
	Engine speed (idling speed)				790...890 rpm1)	=> Page 26

1) Up-to-date specifications:

=> Exhaust emissions test binder

Note on display zone 1:

The idling speed will be increased by the control unit under the following conditions:

- When the battery voltage is too low: up to 900 rpm,

- After a long full throttle drive and high temperatures: up to 960 rpm.

Notes on display zone 2:

- The maximum engine load decreases by about 10 % per 1000 m above sea level.
- The engine load also decreases by up to 10 % if the ambient temperatures are very high.

Evaluating display group 3, display zone 2 - Engine load

Appears on display	Possible fault cause	Fault elimination
Less than 12 %	- Smaller values can occur when driving in overrun	---
More than 40 %	- Rough idling (not running on all cylinders) - Throttle valve control part defective - Electric consumers switched on - Steering wheel at full lock - Gear selected (automatic gearbox)	- Check spark plugs Check injectors =>Page 77 - Check throttle valve control part => Page 59 - Switch off electric consumers - Set steering wheel to centre position - Place selector lever in P or N

Evaluating display group 3, display zone 3 - Throttle valve angle

Appears on display	Possible fault cause	Fault elimination
More than 7 <°	- Engine control unit not matched to throttle valve control part - Throttle valve potentiometer in throttle valve control part defective	- Perform matching to throttle valve control part => Page 7 , interrogating and erasing fault memory - Check throttle valve control part => Page 59

satelettronica
Protected by copyright. Copyright by Volkswagen AG. Volkswagen AG does not guarantee or accept any liability with respect to the correctness of information in this document. Copyright by Volkswagen AG.

	- Accelerator cable adjustment	- Adjust accelerator cable: => Repair group 20; Accelerator mechanism; Adjusting accelerator cable Adjusting accelerator cable
	- Throttle valve sticking	- Eliminate cause

Note:

If the accelerator pedal is floored the value will be more than 75 <°.

Display group 4 -Engine operating condition-						
Read measured value block 4 ⇒				[Itrif] Indicated on display		
xxxx rpm	xxx %	xxx km/h	xxxxxxxx			
1	2	3	4	[Itrif] Display zones	Specification	Evaluation
				Engine operating condition	01000000	=> Page 31
			Road speed		0 km/h	---
		Engine load			12...40 %	=> Page 30
	Engine speed (idling speed)				790...890 rpm1)	=> Page 26

1) Up-to-date specifications:

=> Exhaust emissions test binder

Note on display zone 1:

The idling speed will be increased by the control unit under the following conditions:

- When the battery voltage is too low: up to 900 rpm,

- After a long full throttle drive and high temperatures: up to 960 rpm.

Notes on display zone 2:

- The maximum engine load decreases by about 10 % per 1000 m above sea level.
- The engine load also decreases by up to 10 % if the ambient temperatures are very high.

Note on display zone 3:

Checking speed signal => Page 101

Note on display zone 4:

Checking engine operating condition => Page 94 .

Significance of figures in 8 digit number block, display zone 4 - Operating conditions

X	X	X	X	X	X	X	X	Signifies
								Not relevant
							Not relevant	
						Not relevant		
					Not relevant			
				1 = Full throttle				
			1 = Part throttle					
		1 = Idling						
	1 = Overrun							

Display group 5 -Throttle valve control part operating conditions-	
Read measured value block 5 ⇒	[Itrif] Indicated on display

satelettronica

xxxx rpm	xxx.x %	x.xx l/h	xxxxxxxx			
1	2	3	4	[ltrif] Display zones	Specification	Evaluation
				Throttle valve control part operating conditions	00000000	=> Page 32
			Fuel consumption		0.50...1.10 l/h	---
		Activated charcoal filter solenoid valve 1 duty cycle			6.0...19.0 %	---
	Engine speed (idling speed)				790...890 rpm1)	=> Page 26

1) Up-to-date specifications:

=> Exhaust emissions test binder

Note on display zone 1:

The idling speed will be increased by the control unit under the following conditions:

- When the battery voltage is too low: up to 900 rpm,

- After a long full throttle drive and high temperatures: up to 960 rpm.

Notes on display zone 2:

Check activated charcoal filter solenoid valve 1 -N80 => Page 19 , final control diagnosis

Notes on display zone 3:

- The specification is only valid for an idling speed which is not loaded due to ancillaries (e.g. automatic gearbox, air conditioning/heating, alternator, P.A.S. pump).
- ltr./100 km not suitable for fuel consumption measurement.

Note on display zone 4:

Check throttle valve control part => Page 59 .

Significance of figures in 8 digit number block, display zone 4 - Throttle valve control part operating conditions

X	X	X	X	X	X	X	X	Signifies
								Idling switch (F60), during basic setting 0 = Idling switch closed 1 = Idling switch open
								Voltage between throttle valve potentiometer (G69) and throttle valve positioner potentiometer (G88) 0 = Voltage within tolerance 1 = Voltage outside the tolerance
								Signal between throttle valve potentiometer (G69) and throttle valve positioner potentiometer (G88) 0 = Plausible signal 1 = Implausible signal
								Idling switch (F60), before the basic setting 0 = Idling switch closed 1 = Idling switch open
								Speed signal 0 = No speed signal recognised 1 = Speed signal recognised
								Battery voltage 0 = Battery voltage OK. 1 = Battery voltage too low
								Not relevant

Protected by copyright. Copyright by Volkswagen AG. Volkswagen AG does not guarantee or accept any liability with respect to the correctness of information in this document. Copyright by Volkswagen AG. Volkswagen AG is not permitted under its authority for private or commercial purposes, in part or in whole, to be reproduced or made available to third parties.

satelettronica

Not relevant

Display group 6 -Basic functions-						
Read measured value block 6 ⇒				[Itrif] Indicated on display		
xxx.x %	---	---	xxx °C			
1	2	3	4	[Itrif] Display zones	Specification	Evaluation
				Value stored for the throttle valve potentiometer position during the basic setting of the throttle valve control part: Throttle valve closed	Not for Service department	---
			Vacant		---	---
		Vacant			---	---
	Mixture correction				Not for Service department	---

Display group 098 -Matching throttle valve control part-1)						
Read measured value block 98 ⇒				[Itrif] Indicated on display		
x.xxx V	x.xxx V	Text	Text			
1	2	3	4	[Itrif] Display zones	Specification	Evaluation
				Adapting mode	ADP. is running or ADP. OK. or ADP ERROR	---
			Engine operating mode		Idling or part throttle	---
		Throttle valve positioner potentiometer voltage (G88)			0.500...5.000 V	---
	Throttle valve potentiometer voltage (G69)				0.500...5.000 V	---

1) Matching throttle valve control part to engine control unit => Page 98 .

Note on display group 98:

The throttle valve control part will be matched to the engine control unit when the display group 98 under function 04 "Basic setting" is selected. This matching must always be carried out when a different throttle valve control part (or other complete engine) or a different engine control unit is fitted.

If the voltage supply is interrupted (battery disconnected) adaption must also be performed.

Protected by copyright. Copying for private or commercial purposes, in part or in whole, is not permitted unless authorised by Volkswagen AG. Volkswagen AG does not guarantee or accept any liability with respect to the correctness of information in this document. Copyright by Volkswagen AG.

satelettronica

24 - Mixture preparation, Injection

1 - Servicing injection system

1.1 - Servicing injection system

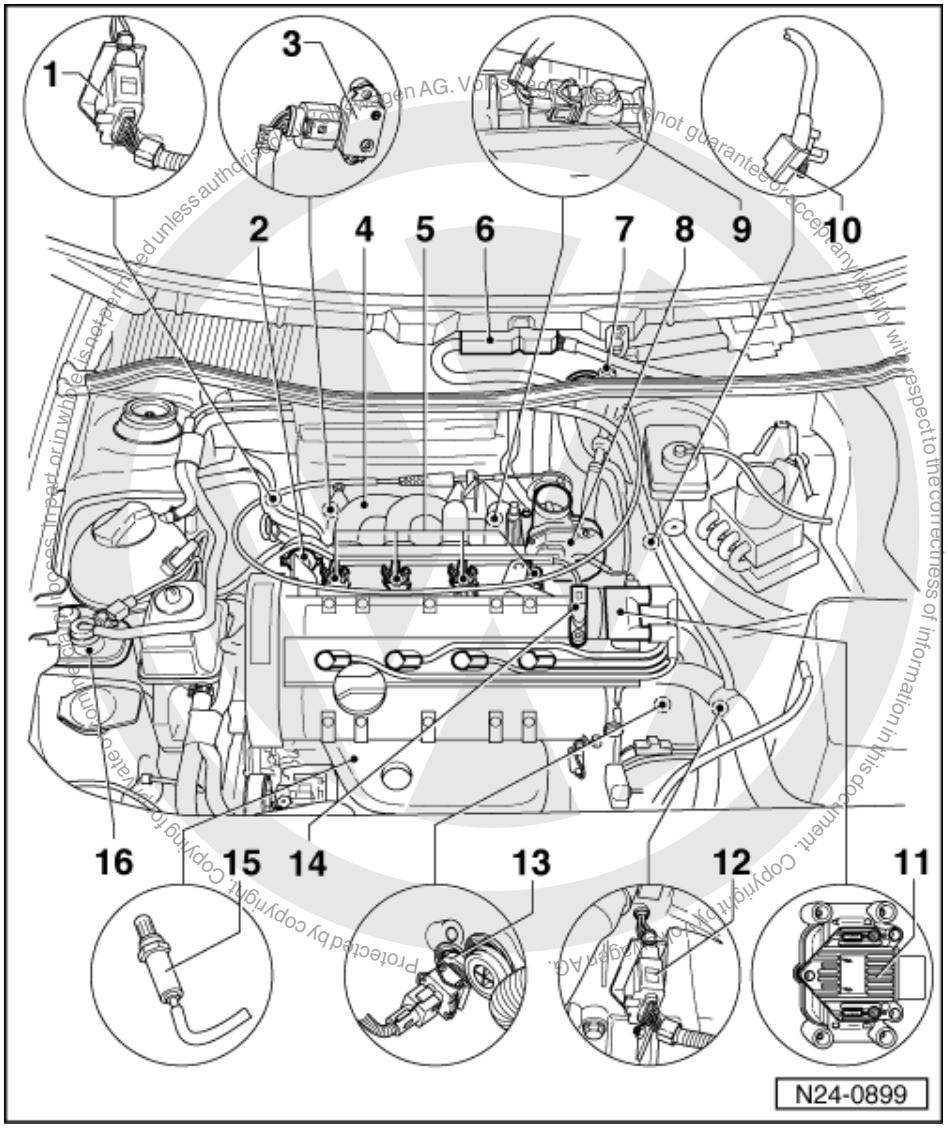

1.2 - Fitting locations overview

1 3 pin connector
- Grey for engine speed sender (G28)

2 Fuel pressure regulator
3 Intake manifold pressure sender (G71) with intake air temperature sender (G42)
4 Intake manifold
5 Injector (N30...N33)
6 4AV control unit (J448)
7 Earth connection

satelettronica

8 Throttle valve control part (J338)

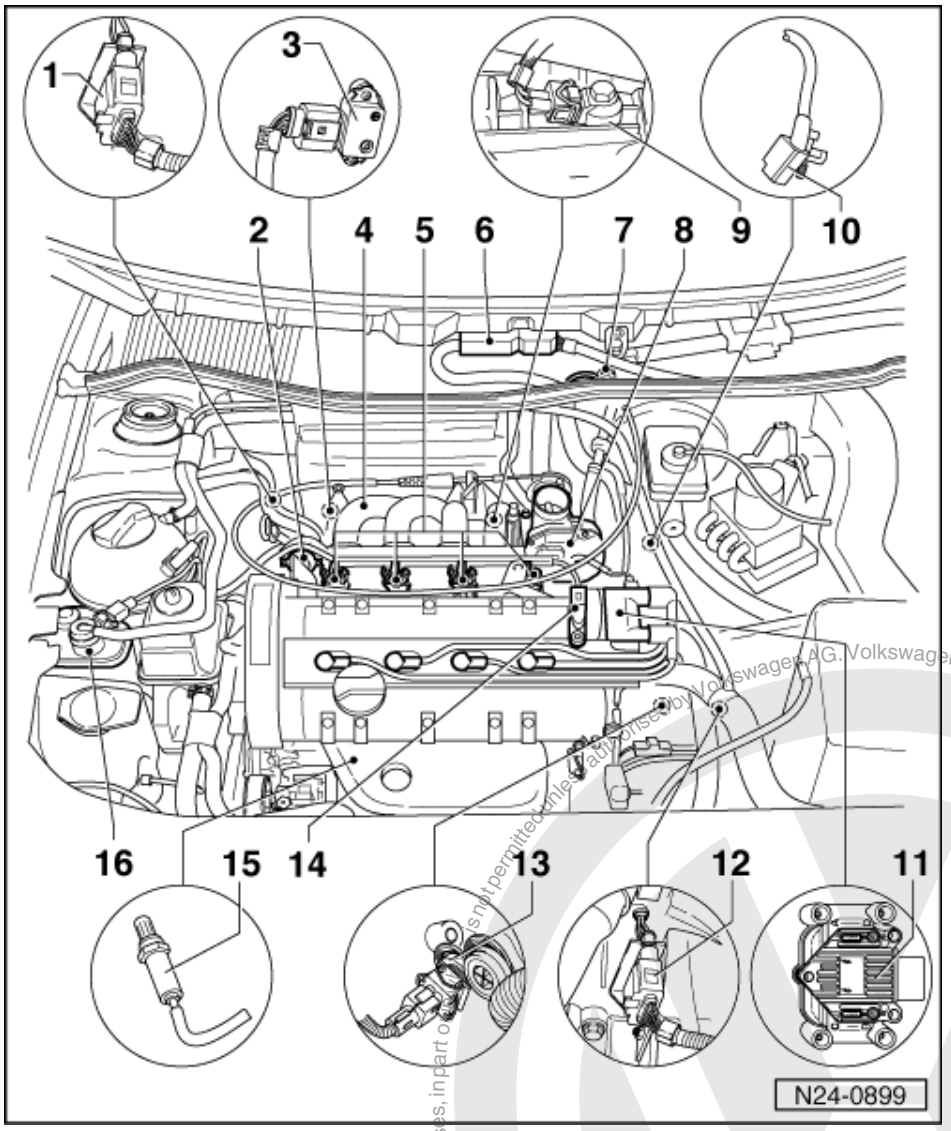

9 Knock sensor 1 (G61)
- => Page 111 , item 6

10 Engine speed sender (G28)
- Inductive sender
- Fitting location: cylinder block intake side

11 Ignition transformer (N152)
- With ignition cable identification, do not interchange
- => Page 110 , item 2

12 4 pin connector
- Black
- For Lambda probe and Lambda probe heating

13 Coolant temperature sender (G62)
- Blue
- With coolant temperature gauge sender (G2)

Protected by copyright. Copying for private or commercial purposes, in part or in whole, is not permitted unless authorised by Volkswagen AG. Volkswagen AG does not guarantee or accept any liability with respect to the correctness of information in this document. Copyright by Volkswagen AG.
satelettronica

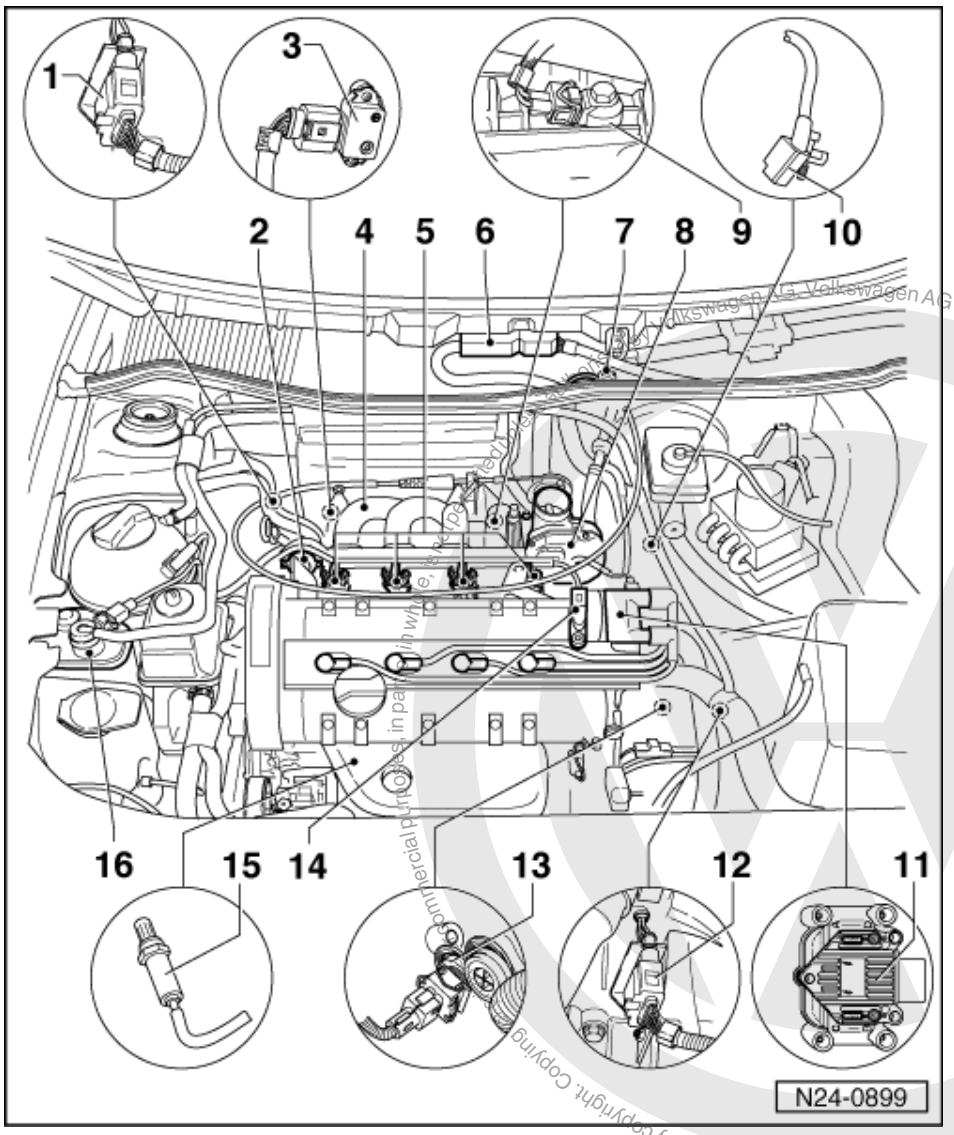

14 Hall sender (G40)
- => Page 112 , item 9

15 Lambda probe (G39), 50 Nm
- Location: In front exhaust pipe

16 Activated charcoal filter solenoid valve 1 (N80)
- In activated charcoal filter
- Activated charcoal filter system

=> Repair group 20; Removing and installing parts of the fuel supply system; Servicing parts of the activated charcoal filter system Removing and installing parts of the fuel supply system Servicing parts of the activated charcoal filter system

1.3 - General notes on injection

Servicing ignition part:
=> Repair group 28

- The engine control unit is equipped with self-diagnosis. Before carrying out repairs and fault finding the fault memory must be interrogated. Also the vacuum hoses and connections must be checked (unmetered air).
- Fuel hoses in engine compartment must only be secured with spring type clips. The use of clamp or screw type clips is not permissible.

Protected by copyright. Copying in whole or in part is only permitted with the consent of Volkswagen AG. Volkswagen AG does not guarantee or accept any liability with respect to the correctness of information in this document. Copyright by Volkswagen AG.
satelettronica

- Disconnecting and connecting the battery must only be done with the ignition switched off, otherwise the engine control unit could be damaged.
- Components marked with * are checked via the self diagnosis => Page 7 , interrogating and erasing fault memory.
- Components marked with **can be checked with the final control diagnosis => Page 19 .
- For trouble-free operation of the electrical components, a voltage of at least 11.5 V is necessary.
- Do not use sealants containing silicone. Particles of silicone drawn into the engine, will not be burnt in the engine and damage the Lambda probe.
- If the engine starts, runs for a short period and then stops, after fault finding, repairs or component tests, then the fault may lie with the immobilizer which is blocking the engine control unit. The fault memory must be interrogated and if necessary the control unit matched => Page 100 .
- During some checks it is possible that the control unit will recognise and store a fault. Therefore after completing all checks and repairs the fault memory must be interrogated and if necessary erased. => Page 7 , interrogating and erasing fault memory

Safety precautions =>Page 55

Rules for cleanliness => Page 56

Technical data => Page 57

Checking intake system for leaks (unmetered air) => Page 87 .

Checking engine operating mode => Page 94

Protected by copyright. Copying for private or commercial purposes, in part or in whole, is not permitted unless authorised by Volkswagen AG. Volkswagen AG does not guarantee or accept any liability with respect to the correctness of information in this document. Copyright by Volkswagen AG.

satelettronica

1.4 - Removing and installing parts of the injection system

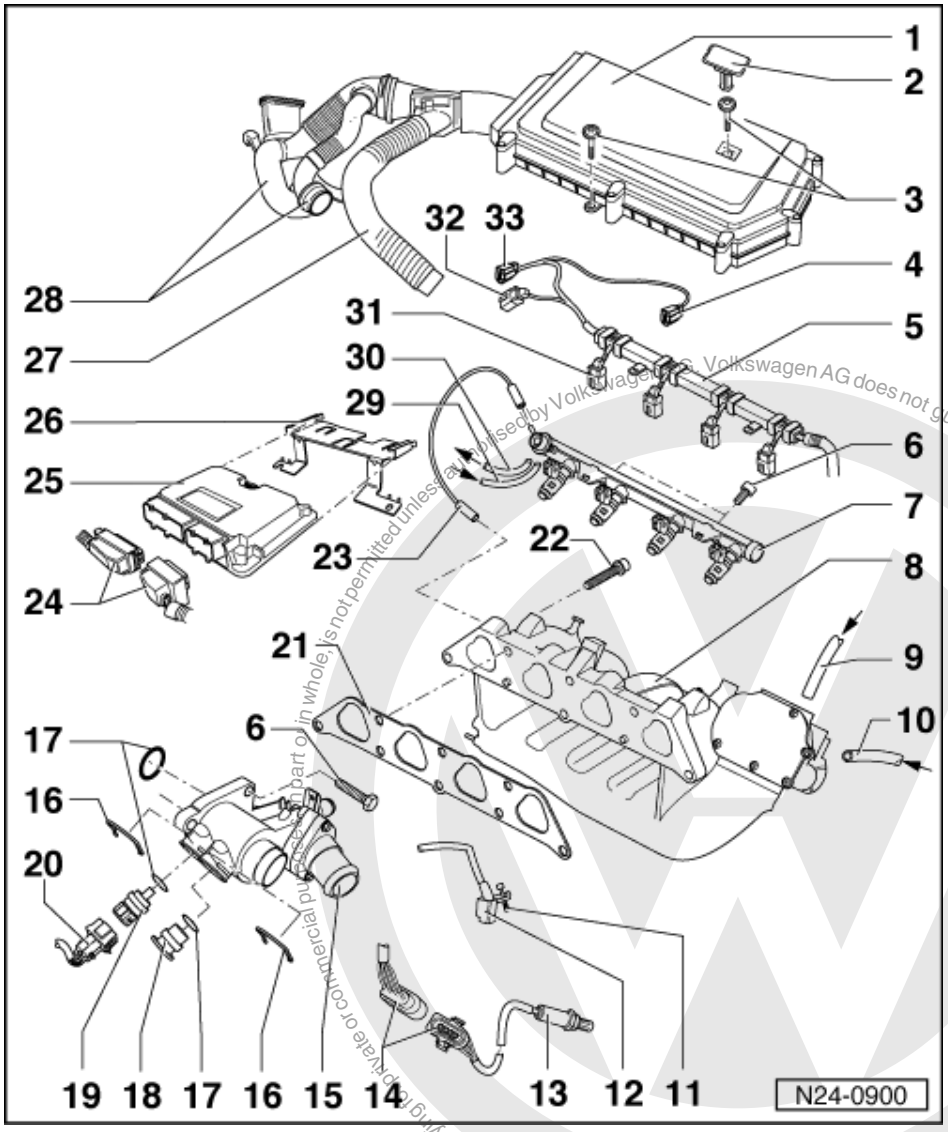

1 Air cleaner
- Removing and installing air cleaner => Page 55 , Fig. 3
- Dismantling and assembling => Page 52

2 Plug

3 3 Nm
- Notes on installing => Page 55

4 Connector
- Black, 3 pin
- Hall sender (G40)

5 Cable guide
- Clipped onto fuel rail

6 10 Nm

Protected by copyright. Copying for private or commercial purposes, in part or in whole, is not permitted unless authorised by Volkswagen AG. Volkswagen AG does not guarantee or accept any liability with respect to the correctness of information in this document. Copyright by Volkswagen AG.
satelettronica

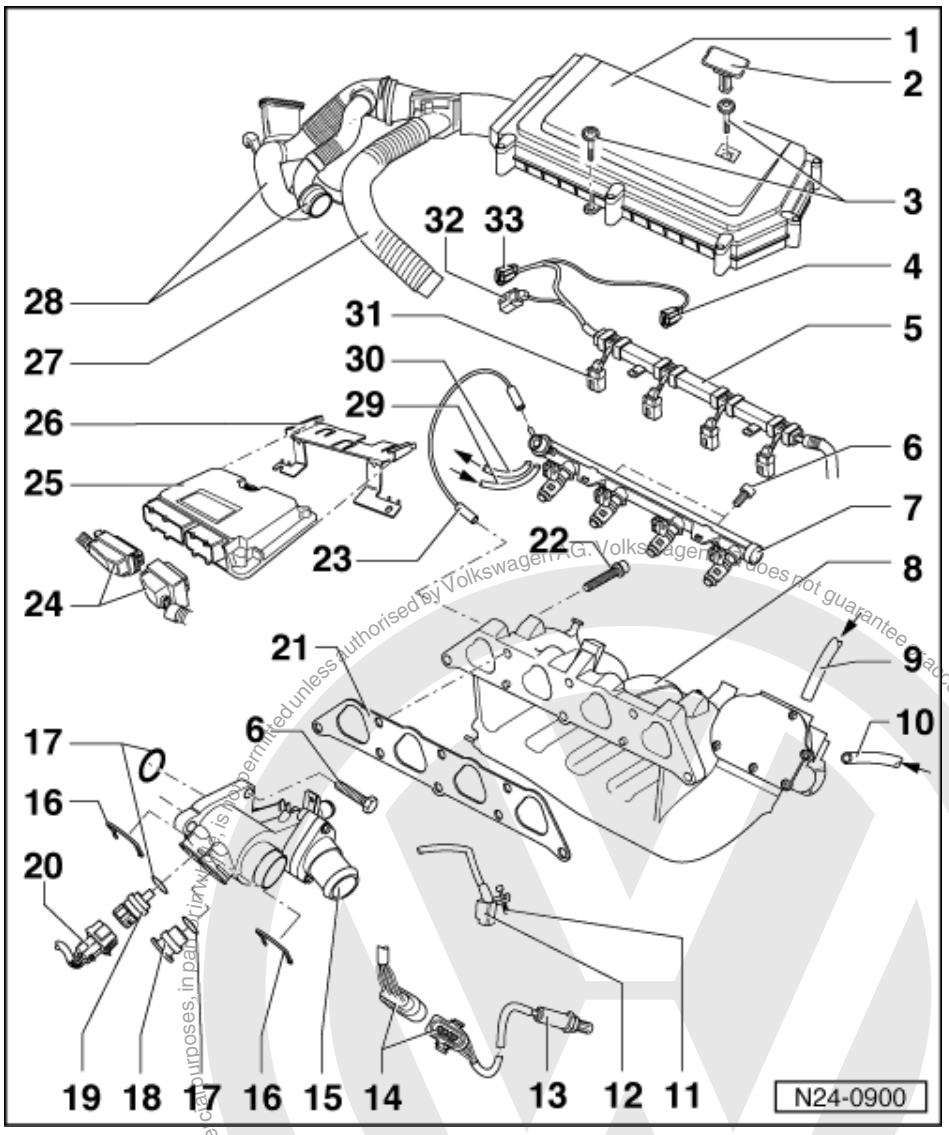

7 Fuel manifold with injectors
- Dismantling and assembling => Page 49

8 Intake manifold
- Dismantling and assembling => Page 49

9 From activated charcoal filter solenoid valve (N80)*/**

=> Repair group 20; removing and installing parts of the fuel supply system; servicing activated charcoal filter system removing and installing parts of the fuel supply system servicing activated charcoal filter system

10 From brake servo

11 5 Nm

satelettronica

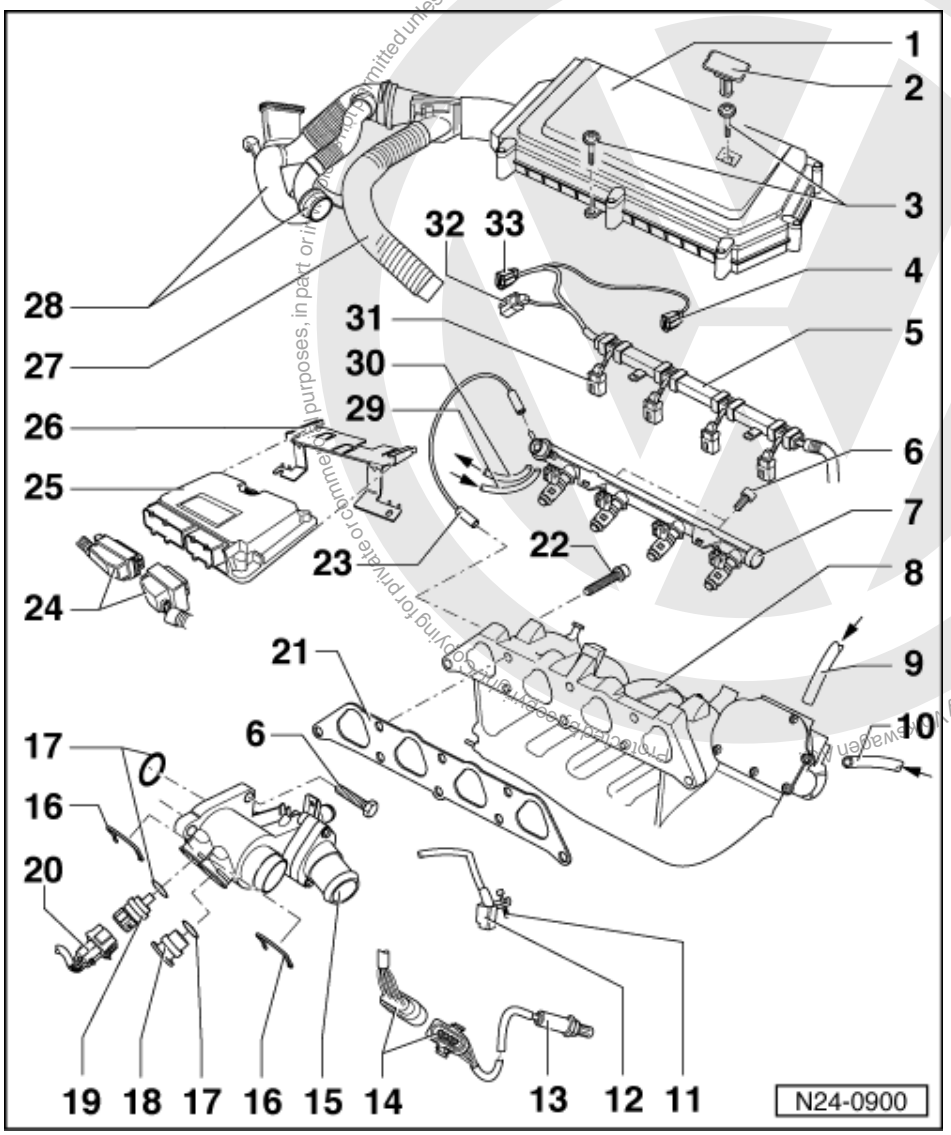

12 Engine speed sender (G28)*

- Inductive sender
- To remove, remove intake manifold item 8
- Checking => Page 75
- Fitting location => Page 34 , fitting location overview

13 Lambda probe (G39)*, 50 Nm

- Grease only the threads with "G5"; "G5" must not get into the slots on the probe body
- Checking Lambda control
  => Page 91
- Probe heating voltage supply via fuel pump relay (J17)
- Checking Lambda probe heating => Page 57
- Check probe heating for continuity
- Fitting location => Page 34 , fitting location overview

Copyright by Volkswagen AG. Volkswagen AG does not guarantee or accept any liability with respect to the correctness of information in this document. Copying for private or commercial purposes, in part or in whole, is not permitted unless authorised by Volkswagen AG.
satelettronica

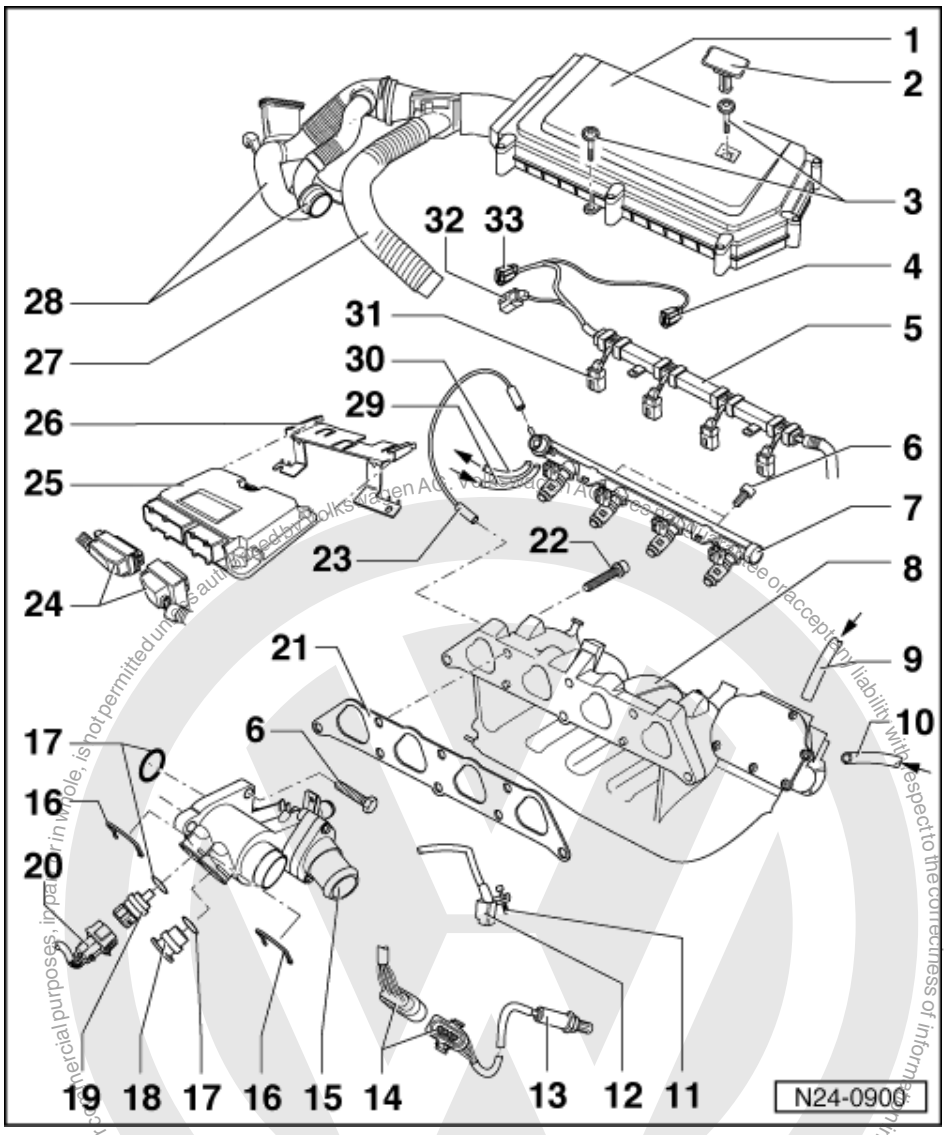

14 4 pin connector
- Black
- For Lambda probe and Lambda probe heating
- Fitting location => Page 34 , fitting location overview

15 Thermostat housing

16 Retaining clip
- Check seated securely

17 O ring
- Renew if damaged

18 Plug
- If necessary release pressure in cooling system before removing

satelettronica

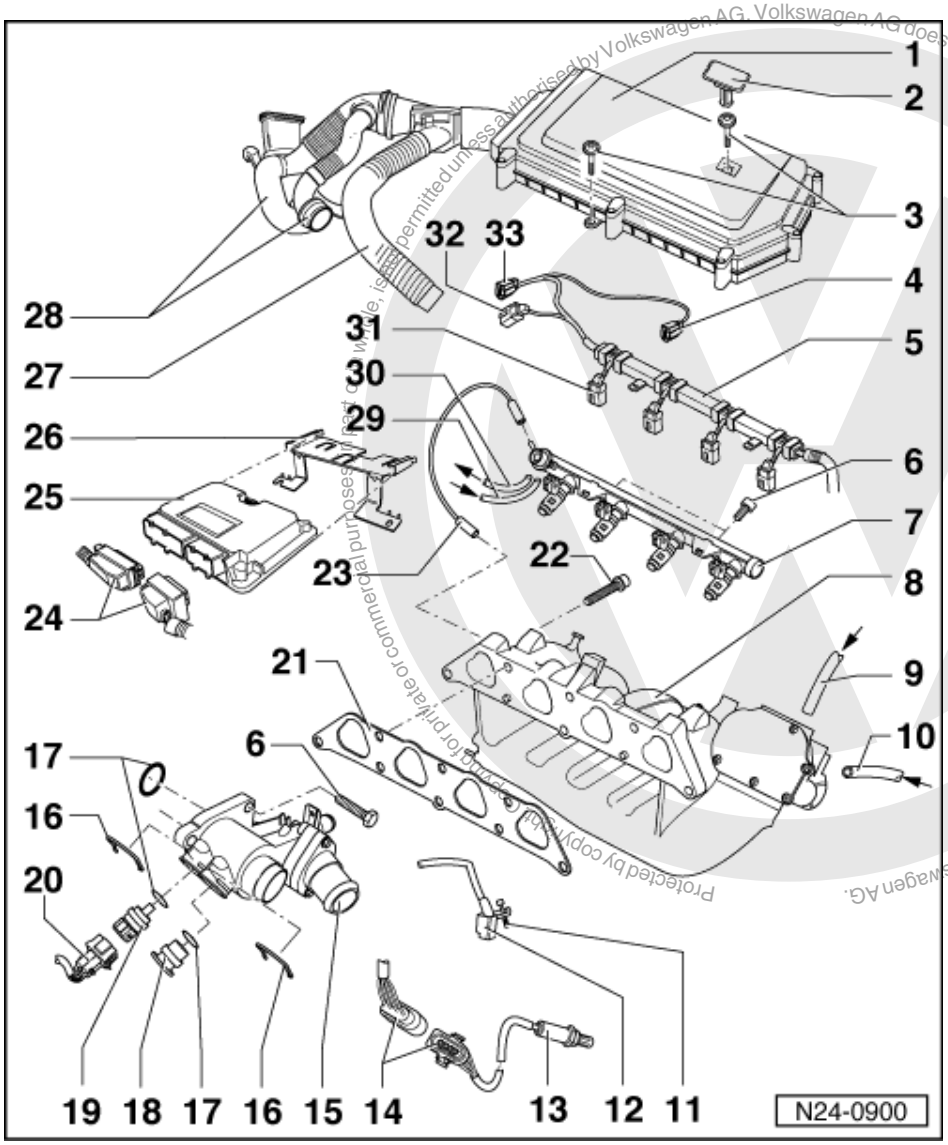

Protected by copyright. Copying for private or commercial purposes, in any form or by any means, is not permitted unless authorised by Volkswagen AG. Volkswagen AG does not guarantee or accept any liability with respect to the correctness of information in this document. Copyright by Volkswagen AG.

satelettronica

19 Coolant temperature sender (G62)*

- Blue
- For engine control unit
- With coolant temperature gauge sender (G2)
- If necessary release pressure in cooling system before removing
- Resistance values between contacts 1 and 3
  =>Page 54 , Fig. 1
- Checking =>Page 73

20 Connector

- Blue, 4 pin
- For coolant temperature sender (G62) and coolant temperature gauge sender (G2)

21 Gasket

- Renew

22 20 Nm

23 Vacuum hose

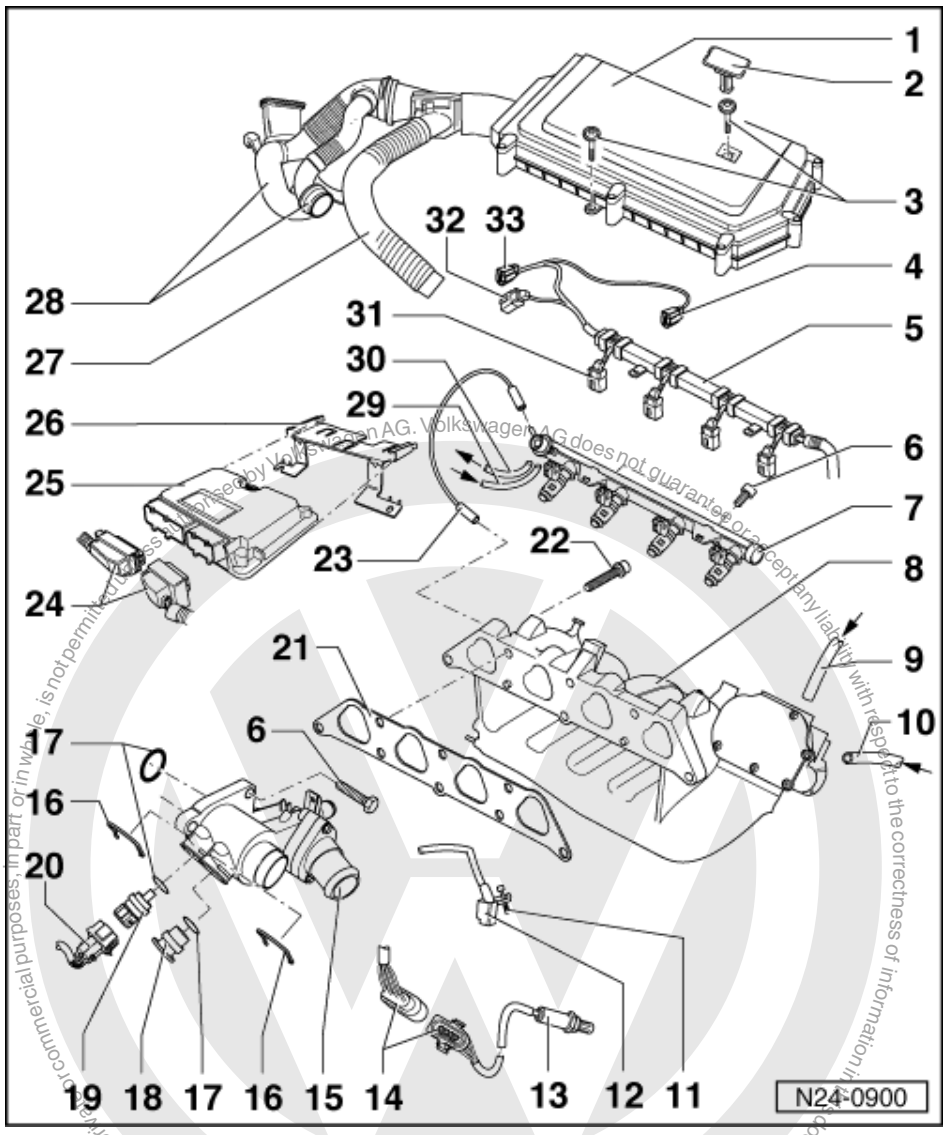

24 Connector

- Only disconnect or connect with ignition switched off

25 4AV control unit (J448)*

- For injection system, Lambda regulation, activated charcoal filter solenoid valve, knock control, governed speed, ignition and self-diagnosis
- Checking voltage supply => Page 95
- If replaced carry out basic setting => Page 98
- On replacement, the control unit must be matched to the electronic immobilizer => Page 100
- Renew => Page 97
- Fitting location => Page 34 , engine compartment overview

satelettronica

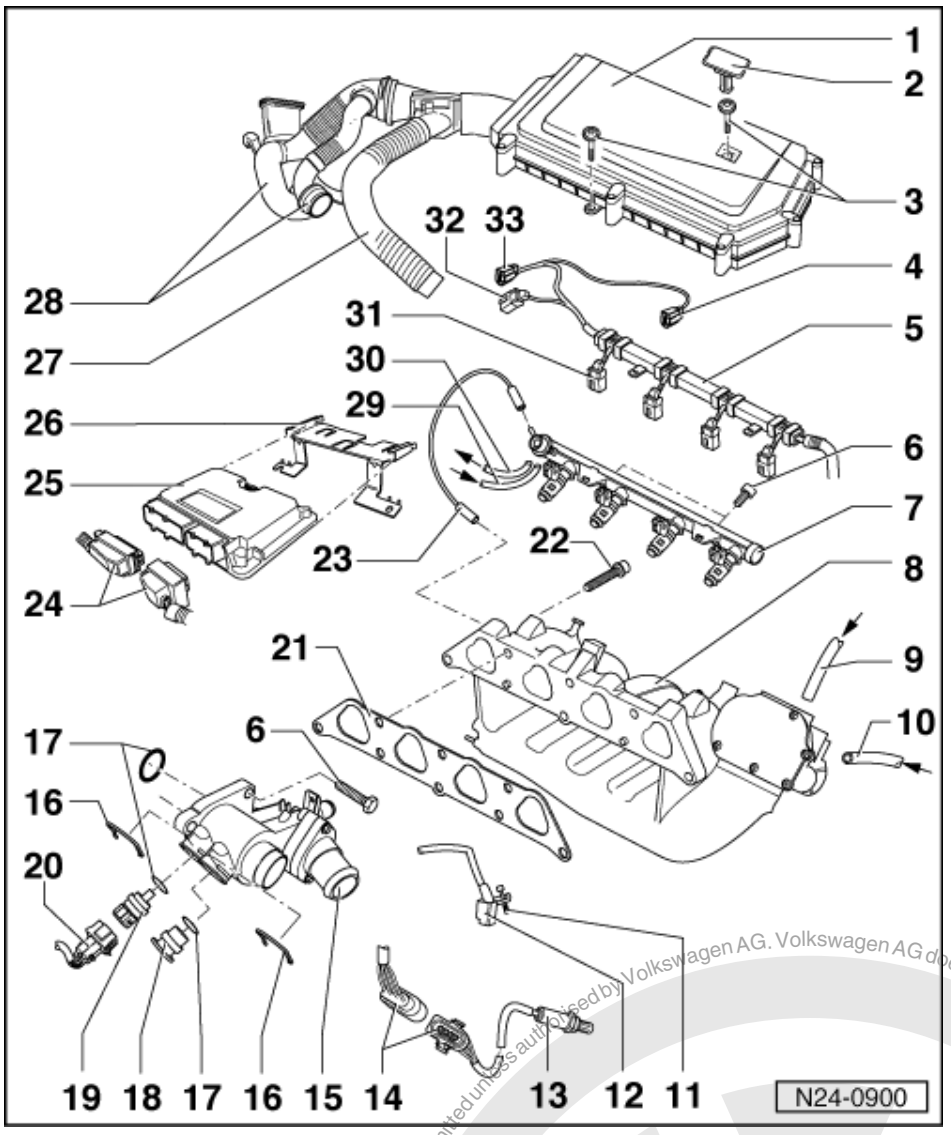

26 Retaining frame

27 Warm air intake hose

- From warm air collector plate:

=> Repair group 26; Removing and installing parts of exhaust system Removing and installing parts of exhaust system

28 Resonance pipe

29 Supply hose

- Black with white marks
- Secure with spring-type clips
- Check securely seated
- From fuel filter:

=> Repair Group 20; Removing and installing parts of fuel supply system; Removing and installing fuel tank with attachments and fuel filter Removing and installing parts of fuel supply system Removing and installing fuel tank with attachments and fuel filter

Protected by copyright. Copyright for private or commercial purposes, in part or in whole, is not permitted unless authorised by Volkswagen AG. Volkswagen AG does not guarantee or accept any liability with respect to the correctness of information in this document. Copyright by Volkswagen AG.
satelettronica

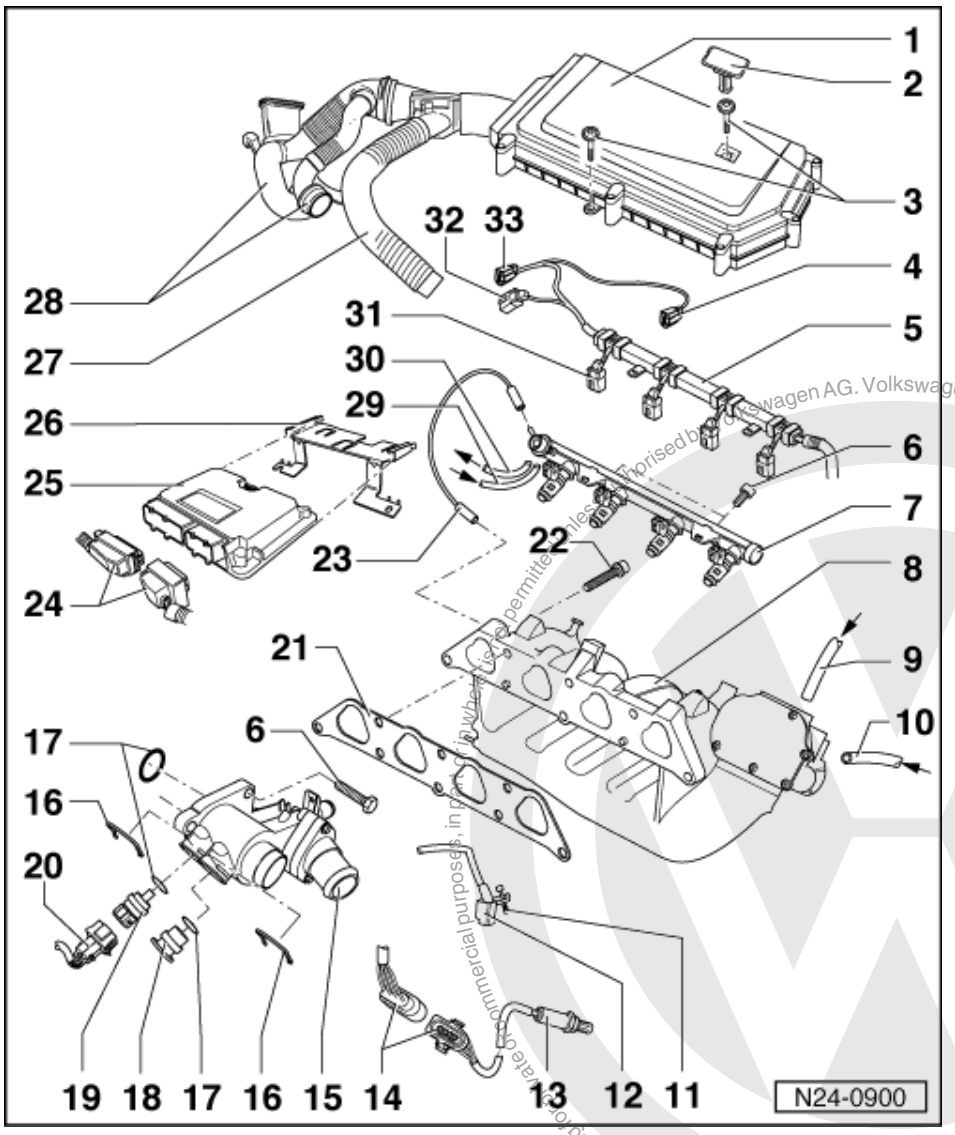

30 Return hose

- Blue or blue markings
- Secure with spring-type clips
- Check securely seated
- To the fuel delivery unit in fuel tank

=> Repair Group 20; Removing and installing parts of fuel supply system; Removing and installing fuel tank with attachments and fuel filter Removing and installing parts of fuel supply system Removing and installing fuel tank with attachments and fuel filter

31 Connector

- Black, 2-pin
- For injector (N30...N33)

32 3 pin connector

- Grey
- For engine speed sender
  => item 12
- Fitting location => Page 34 , engine compartment overview

Protected by copyright. Copying for private or commercial purposes, in part or in whole, is not permitted unless authorised by Volkswagen AG. Volkswagen AG does not guarantee or accept any liability with respect to the correctness of information in this document. Copyright by Volkswagen AG.
satelettronica

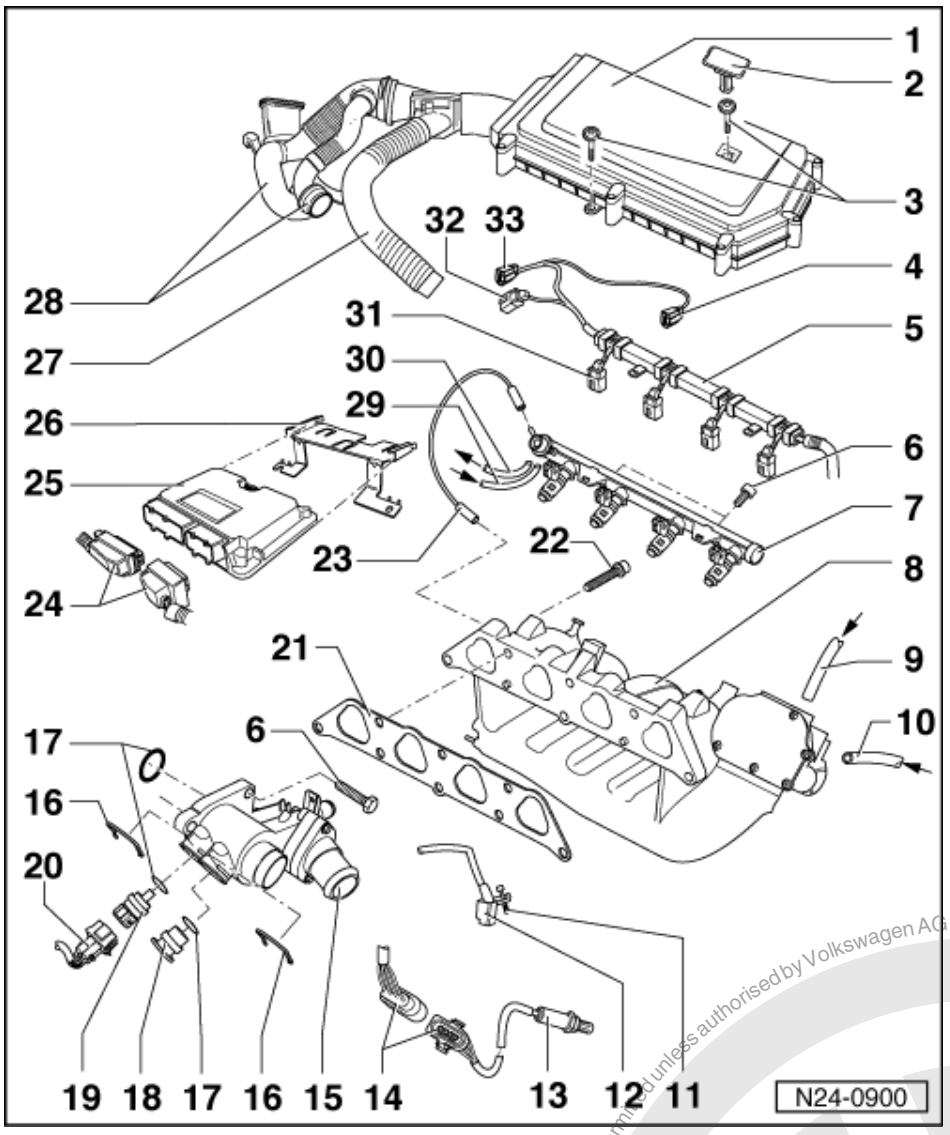

33 Connector

- Black, 4 pin
- For intake manifold pressure sender and sender for intake air temperature in intake manifold

Protected by copyright. Copying for private or commercial purposes, in part or in whole is not permitted unless authorised by Volkswagen AG. Volkswagen AG does not guarantee or accept any liability with respect to the correctness of information in this document. Copyright by Volkswagen AG.
satelettronica

1.5 - Dismantling and assembling intake manifold

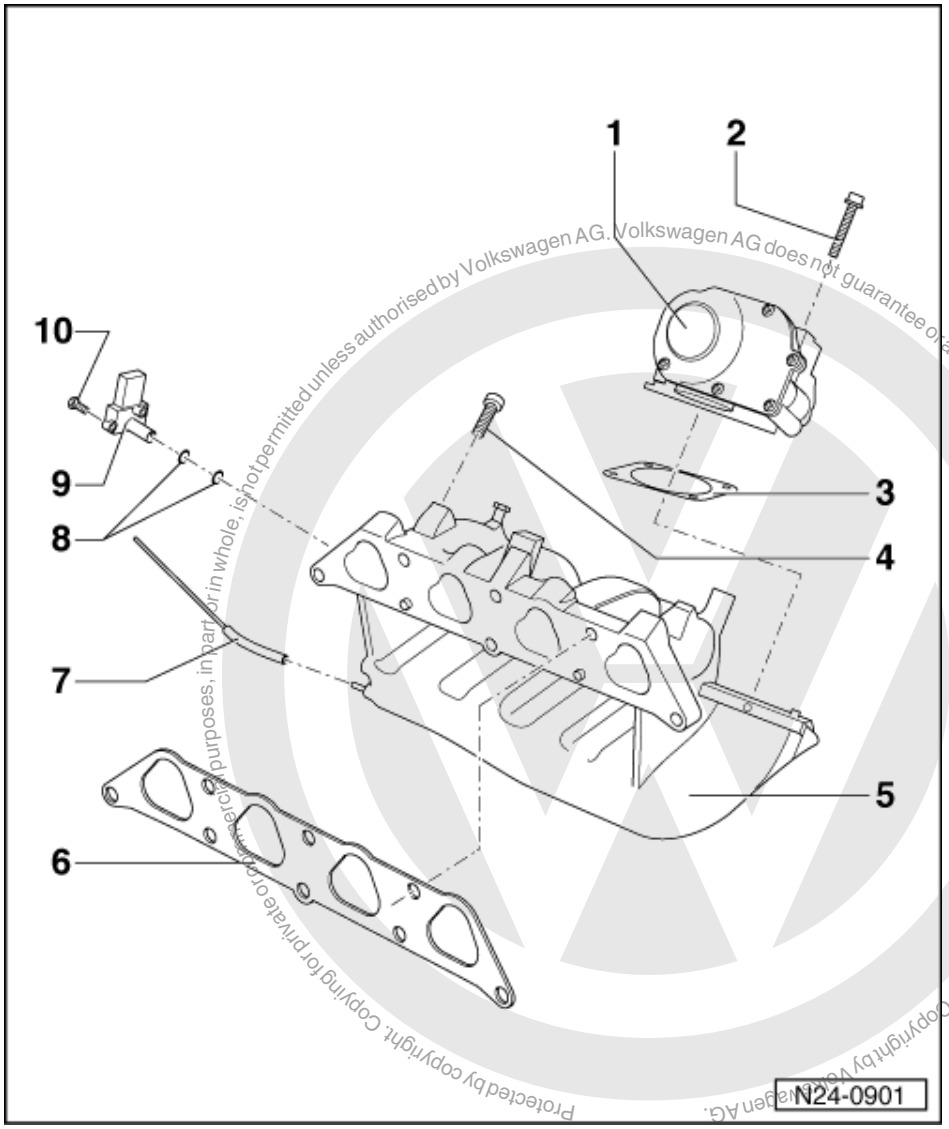

Protected by copyright. Copying for private or commercial purposes, in part or in whole, is not permitted unless authorised by Volkswagen AG. Volkswagen AG does not guarantee or accept any liability with respect to the correctness of information in this document. Copyright by Volkswagen AG.

satelettronica

1 Throttle valve control part (J338)*
- Components of the throttle valve control part (J338):
  Throttle valve positioner (V60)*/**, throttle valve potentiometer (G88) *, throttle valve potentiometer (G69) * and idling switch (F60)*
- Checking => Page 59
- If replaced match engine control unit => Page 98

2 10 Nm

3 Gasket
- Renew

4 20 Nm

5 Intake manifold
- Removing and installing
  =>Page 38 , removing and installing parts of the injection system

6 Gasket
- Renew

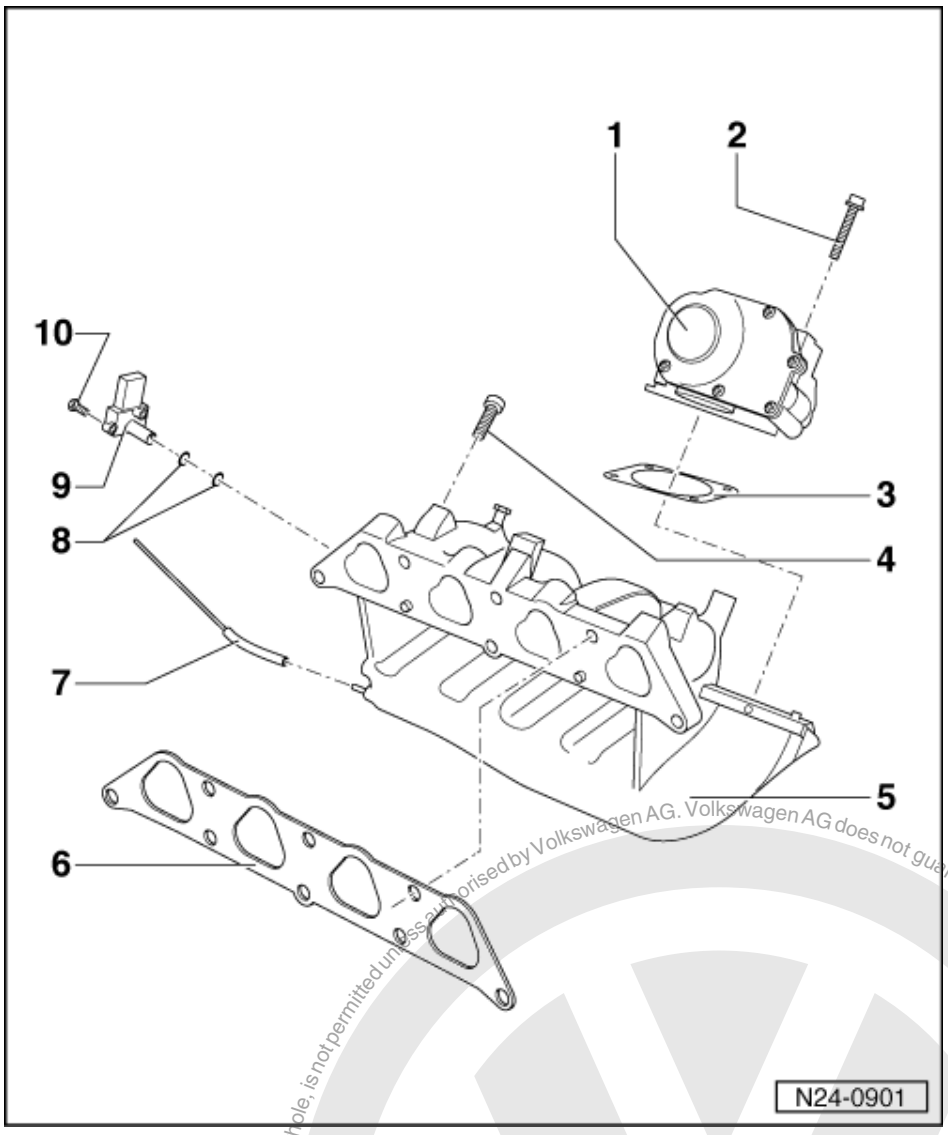

7 Vacuum hose
- From fuel pressure regulator
  => Page 51 , item 12

8 O ring
- Renew if damaged

9 Intake manifold pressure sender (G71)* with intake air temperature sender (G42)*
- Checking intake manifold pressure sender
  =>Page 67
- Checking intake air temperature sender =>Page 70
- Intake air temperature sender resistance values between contacts 1 and 2=>Page 54 , Fig. 2

10 3 Nm

Protected by copyright. Copying for private or commercial purposes, in part or in whole, is not permitted unless authorised by Volkswagen AG. Volkswagen AG does not guarantee or accept any liability with respect to the correctness of information in this document. Copyright by Volkswagen AG.
satelettronica

1.6 - Dismantling and assembling fuel rail with injectors

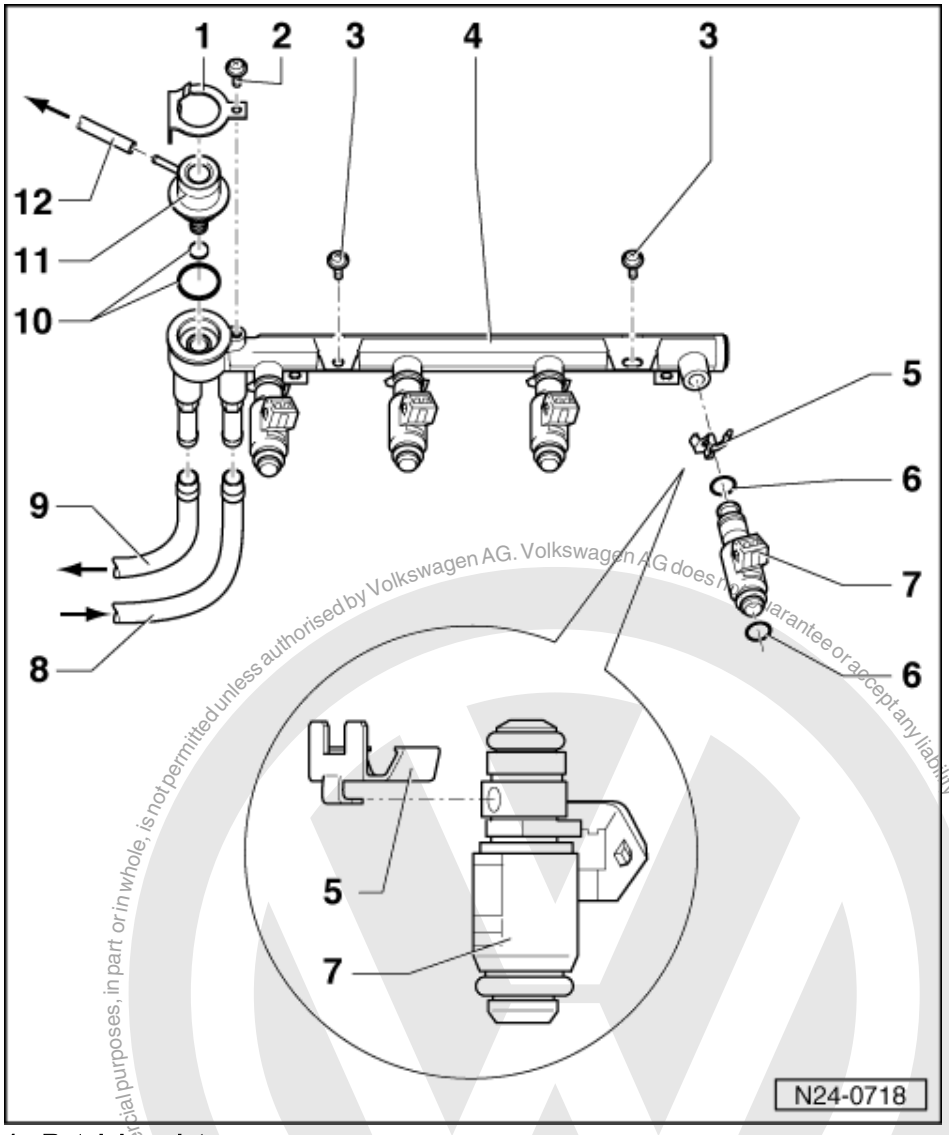

1 Retaining plate
- Note installation position
- Renew if damaged

2 5 Nm

3 10 Nm

4 Fuel rail
- Removing and installing
  =>Page 81 , checking spray pattern and injectors for leaks

5 Retaining clip
- Ensure seated correctly at injector and fuel rail

6 O ring
- Renew
- Before installing moisten with clean engine oil

Protected by copyright. Copying for private or commercial purposes, in part or in whole, is not permitted unless authorised by Volkswagen AG. Volkswagen AG does not guarantee or accept any liability with respect to the correctness of information in this document. Copyright by Volkswagen AG.
satelettronica

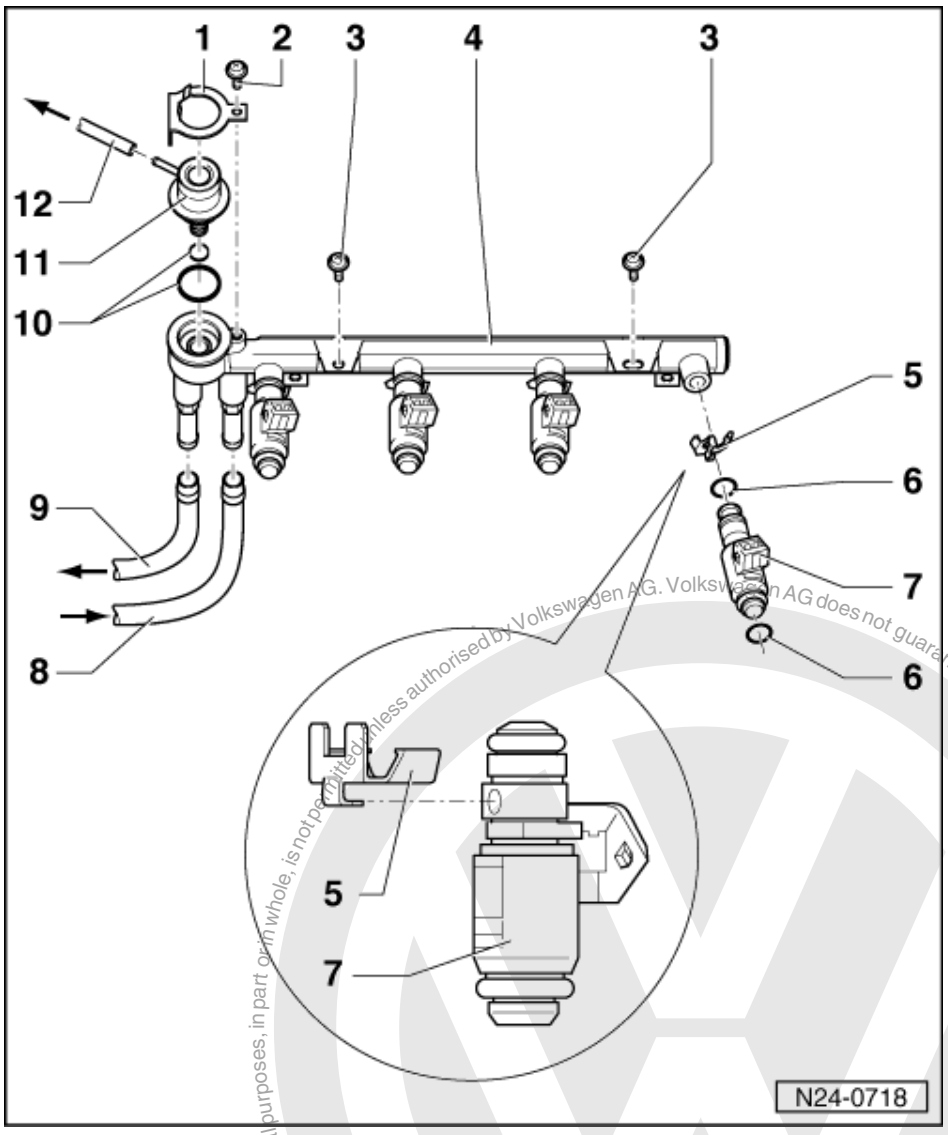

7 Injectors (N30...N33)*
- Checking => Page 77
- Resistance 14.0...17.0 ω

8 Supply hose
- Black with white marks
- Secure with spring-type clips
- Check securely seated
- From fuel filter:

=> Repair Group 20; Removing and installing parts of fuel supply system; Removing and installing fuel tank with attachments and fuel filter Removing and installing parts of fuel supply system Removing and installing fuel tank with attachments and fuel filter

9 Return hose
- Blue or blue markings
- Secure with spring-type clips
- Check securely seated
- To the fuel delivery unit in fuel tank

=> Repair Group 20; Removing and installing parts of fuel supply system; Removing and installing fuel tank with attachments and fuel filter Removing and installing parts of fuel supply system Removing and installing fuel tank with attachments and fuel filter

Protected by copyright. Copying for private or commercial purposes, in part or in whole, is not permitted unless authorised by Volkswagen AG. Volkswagen AG does not guarantee or accept any liability with respect to the correctness of information in this document. Copyright by Volkswagen AG.
satelettronica

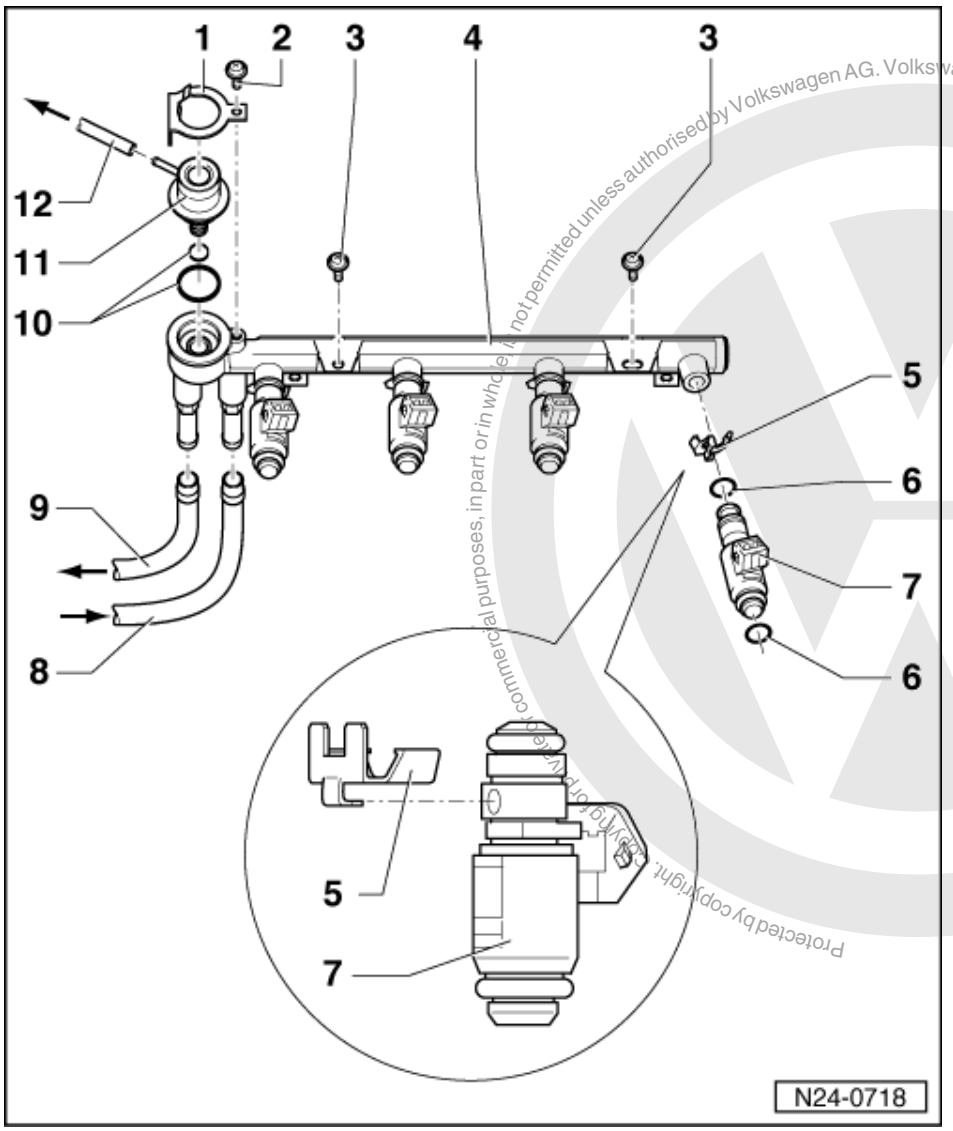

Protected by copyright. Copying for private or commercial purposes, in part or in whole, is not permitted unless authorised by Volkswagen AG. Volkswagen AG does not guarantee or accept any liability with respect to the correctness of information in this document. Copyright by Volkswagen AG.
satelettronica

10 O ring

- Renew if damaged

11 Fuel pressure regulator

- Checking => Page 84 , checking fuel pressure regulator and holding pressure

12 Vacuum hose

- To intake manifold => Page 48 , item 7

1.7 - Dismantling and assembling air cleaner

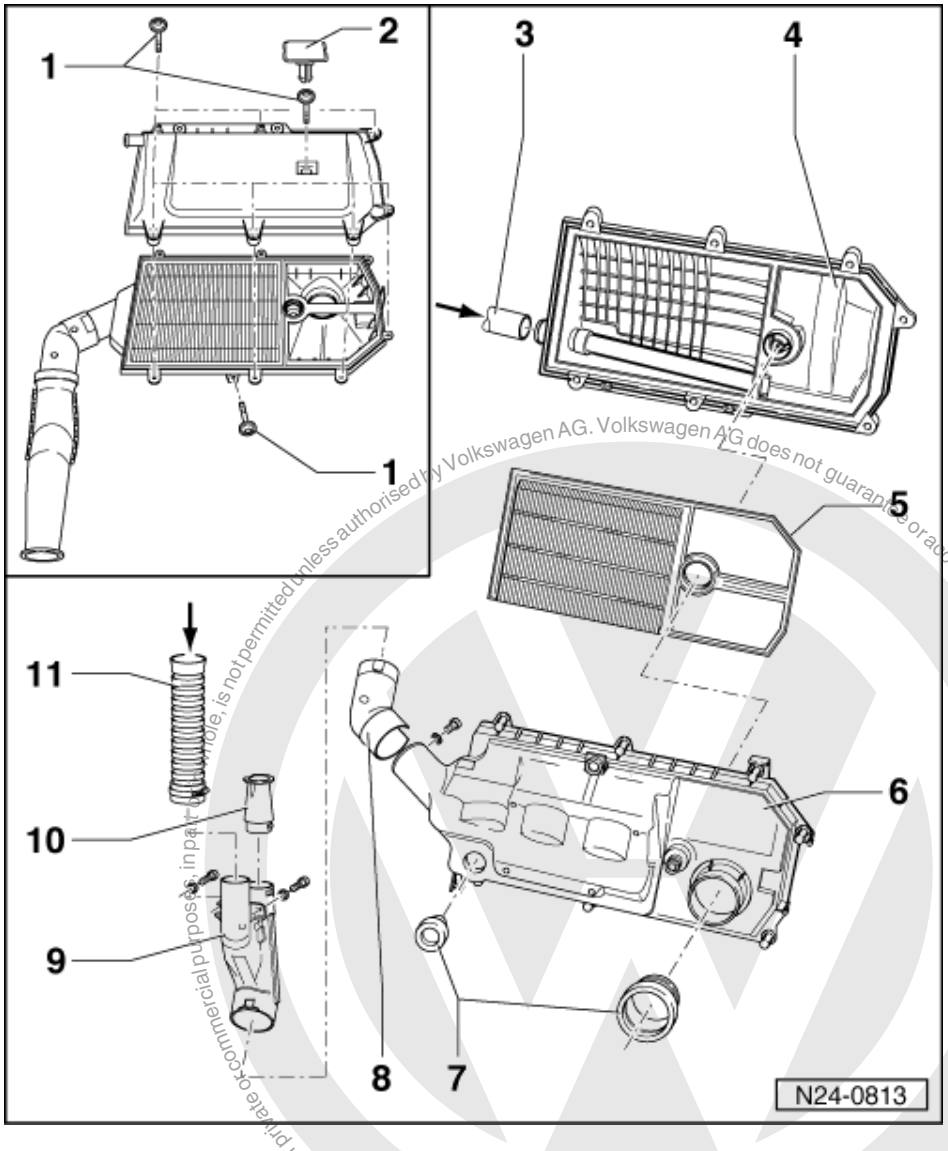

Removing and installing air cleaner => Page 55 , Fig. 3

1 3 Nm
- Notes on installing => Page 55

2 Plug

3 Crankcase breather hose
- From oil separator:

=> Repair group 17; Removing and installing parts of lubrication system Removing and installing parts of lubrication system

4 Air cleaner upper part

5 Filter element

6 Air cleaner lower part

7 Seal
- Check securely seated
- Renew if damaged

Protected by copyright. Copyright by Volkswagen AG.
Volkswagen AG. Volkswagen AG does not guarantee or accept any liability with respect to the correctness of information in this document. Copying for private or commercial purposes, in part or whole, is not permitted unless authorised by Volkswagen AG.
satelettronica

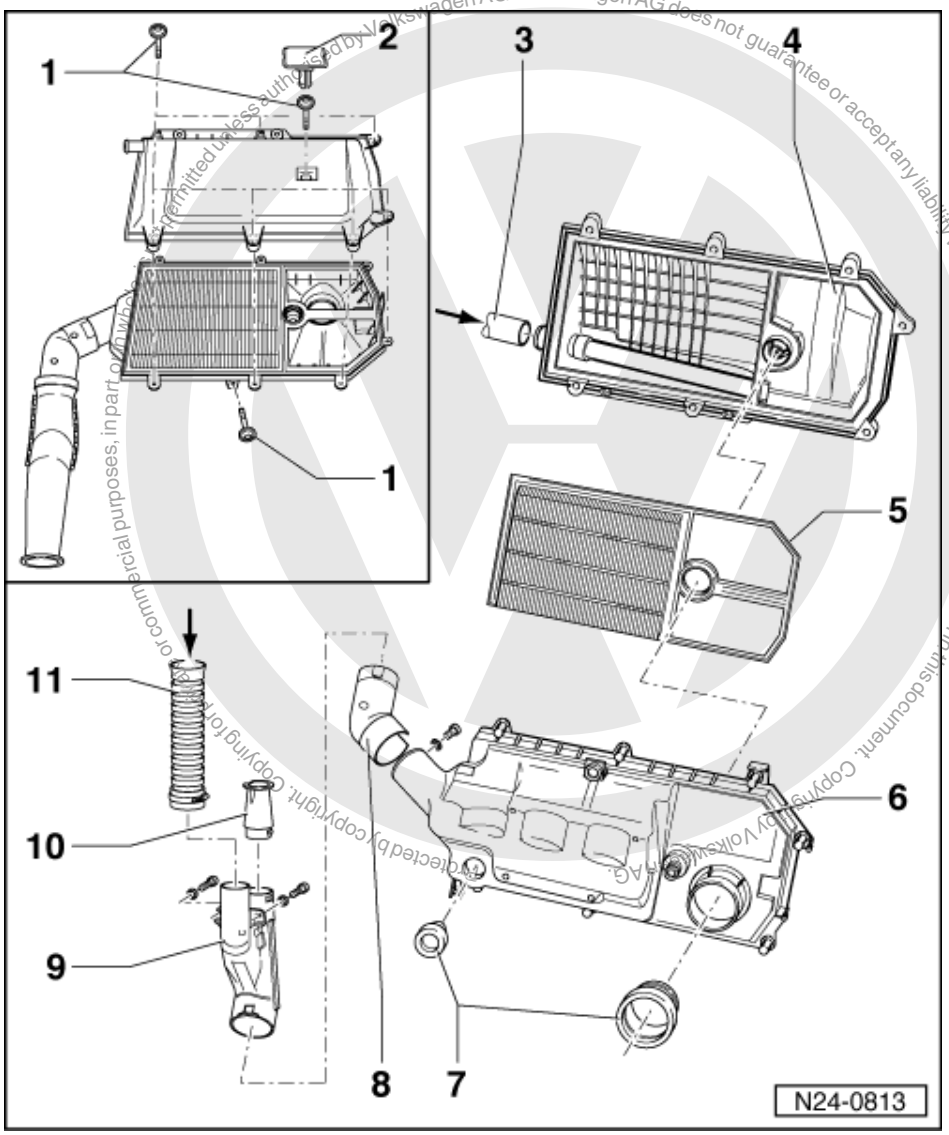

8 Connection
9 Air intake housing with regulating flap
- Check intake air preheating => Page 88

10 Connecting piece for cold air intake
11 Warm air intake hose
- From warm air collector plate:

=> Repair group 26; Removing and installing parts of exhaust system Removing and installing parts of exhaust system

satelettronica

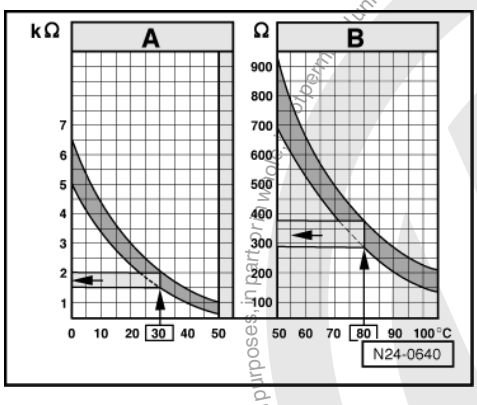

-> Fig. 1 Resistance values for coolant temperature sender (G62)

The diagram is divided into two temperature ranges:

A - From 0...50 °C
B - From 50...105 °C

Examples:

- 30 °C is in range A and corresponds to a resistance of 1.5...2.0 kω
- 80 °C is in range B and corresponds to a resistance of 275...375 ω

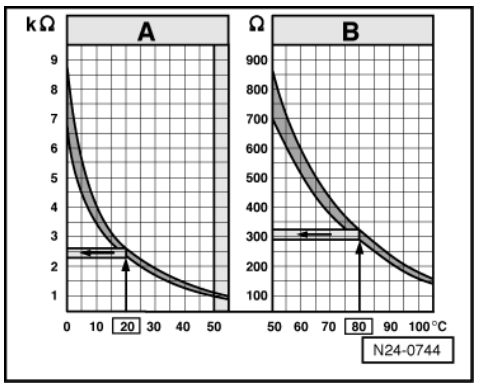

-> Fig.2 Resistance values for intake air temperature sender (G42)

The diagram is divided into two temperature ranges:

A - From 0...50 °C
B - From 50...105 °C

Examples:

- 20 °C is in range A and corresponds to a resistance of 2.3...2.6 kω
- 80 °C is in range B and corresponds to a resistance of 290...330 ω

Copyright by Volkswagen AG. Volkswagen AG does not guarantee or accept any liability with respect to the correctness of information in this document. Copying for private or commercial purposes, in part or in whole, is not permitted unless authorised by Volkswagen AG.
satelettronica

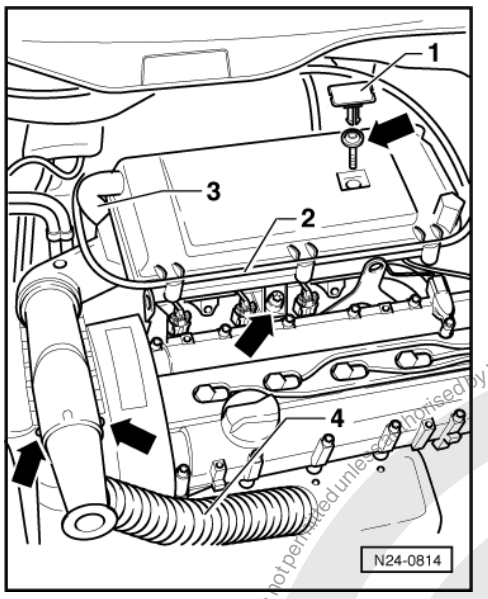

-> Fig. 3 Removing and installing air cleaner

Removing

- Remove plug -1-.
- Unclip the accelerator cable -2- out of the air cleaner upper part.
- Pull crankcase breather hose -3- off air cleaner upper part.
- Pull warm air intake hose -4- off warm air collecting plate.
- Loosen air cleaner at securing screws marked by arrows.
- Remove air cleaner.

Installing

- Installing the air cleaner is carried out in the reverse order.

Note:

Self-tapping screws/bolts are used to secure the air cleaner to plastic intake pipe as well as to secure the air cleaner upper part to the air cleaner lower part. When these screws/bolts are loosed or tightened using a power tool the threads in the intake manifold or the air cleaner lower part may be damaged.

For this reason the use of a power tool can only be authorized when:

- The power tool maximum speed is 200 rpm.
- The tightening torque is set to a maximum of 3 Nm.

1.8 - Safety precautions

Warning!
The fuel system is pressurized! Before loosening hose connections or opening the test connection, wrap a cloth around the connection. Then release pressure by carefully pulling off the hose or carefully unscrewing sealing plug.

To prevent injuries to persons and/or damage to the fuel injection and ignition system, the following must be noted:

- Do not touch or disconnect ignition wiring when the engine is running or being turned at starter speed.

Copyright by Volkswagen AG. Volkswagen AG does not guarantee or accept any liability with respect to the correctness of information in this document. Copying for private or commercial purposes, in part or in whole, is not permitted unless authorised by Volkswagen AG.
satelettronica

- The ignition must be switched off before connecting or disconnecting injection or ignition system wiring or tester cables.

Observe following if test and measuring instruments are required during a test drive:

- Test and measuring instruments must be secured to rear seat and operated by a 2nd person from this location.

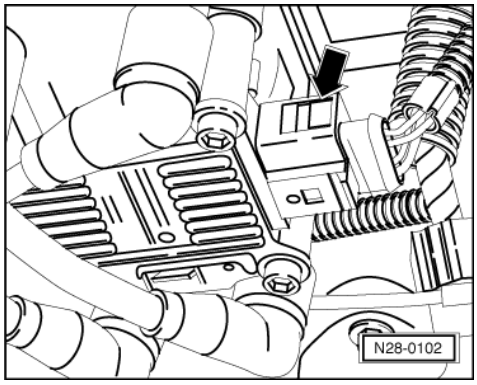

If test and measuring instruments are operated from front passenger's seat and the vehicle is involved in an accident, there is a possibility that the person sitting in this seat may receive serious injuries when the airbag is triggered.

- If the engine is to be turned at starter speed, without starting:

- -> Pull 4 pin connector off ignition transformer -arrow-.

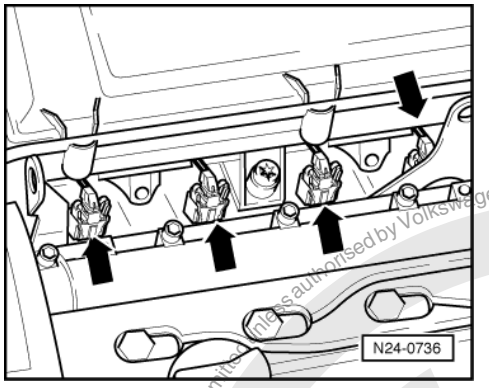

- -> Pull plug -arrows- off all injectors.

1.9 - Rules for cleanliness

When working on the fuel supply/injection system, pay careful attention to the following "5 rules":

- Thoroughly clean all unions and the adjacent areas before disconnecting.
- Place parts that have been removed on a clean surface and cover. Do not use fluffy cloths!
- Carefully cover opened components or seal, if the repair cannot be carried out immediately.
- Only install clean components:
  Only unpack replacement parts immediately prior to installation.
  Do not use parts that have been stored loose (e.g. in tool boxes etc.).
- When the system is open:
  Do not work with compressed air if this can be avoided.
  Do not move vehicle unless absolutely necessary.

Protected by copyright. Copying for private or commercial purposes, in part or in whole, is not permitted unless authorised by Volkswagen AG. Volkswagen AG does not guarantee or accept any liability with respect to the correctness of information in this document. Copyright by Volkswagen AG
satelettronica

1.10 - Technical data

Engine code		AJV
Idling test		
Idling speed2)	rpm	790...8901)
Engine control unit3)		
System		4AV
Part No.4)		036 906 014R
Governed speed	rpm	6900...7200

1) Up-to-date specifications:

=> Exhaust emissions test binder

2) Not adjustable

3) Replacing engine control unit => Page 97

4) For latest part number for engine control unit:

=> Parts film

2 - Checking components

2.1 - Checking components

2.2 - Checking Lambda probe heating

Special tools, workshop equipment, testers, measuring instruments and auxiliary items required

- Hand multimeter V.A.G 1526 or multimeter V.A.G 1715
- Adapter set V.A.G 1594
- Current flow diagram

Check conditions

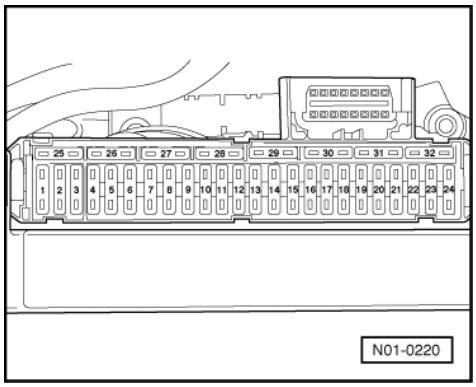

- -> Fuse 8 must be OK.
- The battery voltage must be at least 11.5 V.
- Fuel pump relay must be OK

Protected by copyright. Copyright by Volkswagen AG.
Copyright by Volkswagen AG. Volkswagen AG does not guarantee or accept any liability with respect to the correctness of information in this document. Copying for private or commercial purposes, in part or in whole, is not permitted unless authorised by Volkswagen AG.
satelettronica

Test sequence

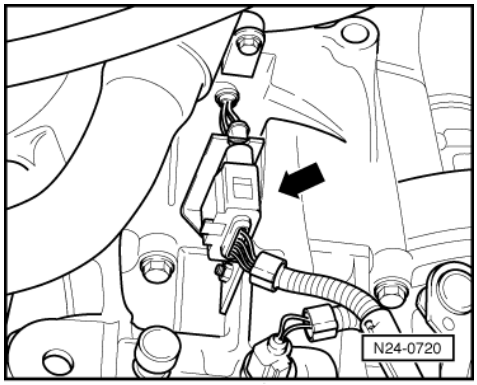

- -> Separate 4 pin connector to Lambda probe (G39) -1-.

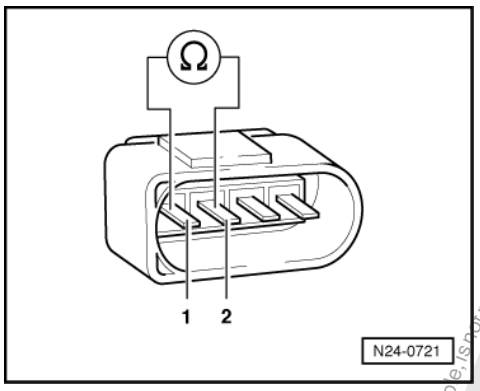

- -> Check probe heating for continuity at Lambda probe connector contacts 1 and 2.

Note:

The heater element resistance is approx. 1...5 ω at room temperature. Even slight increases in room temperature increase the resistance greatly.

If it is determined that probe heating has an open circuit:

- Renew Lambda probe (G39)
  =>Page 40 , item 13 .

If probe heating has continuity:

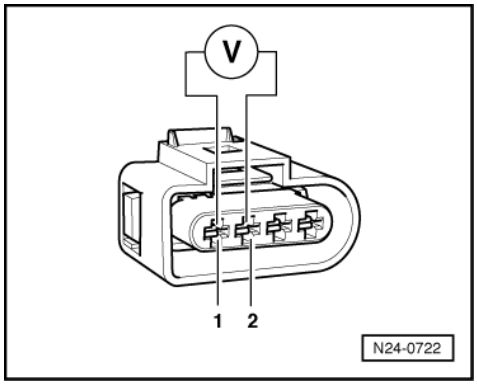

Checking voltage supply

- Set multimeter to "Voltage measurement" range.
- -> Connect multimeter using aux. cables from V.A.G 1594 to measure voltage at contacts 1+2 (connector to engine control unit).

Protected by copyright. Copying for private or commercial purposes, in part or in whole, is not permitted unless authorised by Volkswagen AG. Volkswagen AG does not guarantee or accept any liability with respect to the correctness of information in this document. Copyright by Volkswagen AG.
satelettronica

- Start engine and run at idling speed.

  Specification: 11.0...15.0 V

- Switch off ignition.

If no voltage is present:

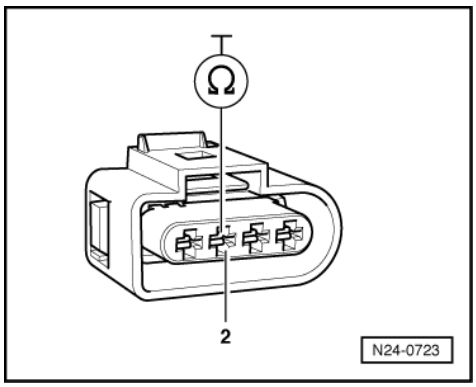

- -> Check wiring between 4 pin connector contact 2 and engine earth for open circuit
  Wire resistance: Max. 1.5 ω

If the specification is attained:

- Check wire between 4 pin connector contact 1 and fuel pump relay (J17) for open circuit using current flow diagram.
  Wire resistance: max. 1.5 ω

2.3 - Checking throttle valve control part

Components of the throttle valve control part (J338):
Throttle valve positioner (V60), throttle valve positioner potentiometer (G88), throttle valve potentiometer (G69) and idling switch (F60)

Note:

If the throttle valve control part is replaced, the following must be carried out:

- Match engine control unit to the throttle valve control part => Page 98
- On vehicles with automatic gearbox: Match the gearbox control unit

=> Automatic gearbox 01M self-diagnosis; Repair group 01; performing self-diagnosis; initiating basic setting performing self-diagnosis initiating basic setting

Special tools, workshop equipment, testers, measuring instruments and auxiliary items required

- Fault reader V.A.G 1551 or vehicle system tester V.A.G 1552 with cable V.A.G 1551/3
- Test box V.A.G 1598/22
- Hand multimeter V.A.G 1526 or multimeter V.A.G 1715
- Adapter set V.A.G 1594
- Current flow diagram

Checking idling switch

Test sequence

- Connect fault reader V.A.G 1551 (V.A.G 1552). Start engine and select "Address word" 01 of engine control unit. When doing this the engine must be running at idling speed.

satelettronica

(Connecting fault reader and selecting engine control unit => Page 2 .)

-> Indicated on display:

```
Rapid data transfer      HELP
Select function XX
```

- Press keys 0 and 8 for the function "Read measured value block" and confirm entry with Q key.

-> Indicated on display:

```
Read measured value block      HELP
Input display group number XXX
```

- Press keys 0, 9 and 8 for "Display group number 98" and confirm entry with Q key.

-> Indicated on display:
(1...4 = Display zones)

```
Read measured value block 98
     1     2     3     4
```

- Check the operating mode display in display zone 3.
  Display: Idling

- Slowly open throttle valve. After free travel, a stop is reached when opening throttle valve further the 4th position from left must jump to part throttle
  Display: Part throttle

Display constantly remains on one operating condition:

Display	Cause	Continuation of check
Part throttle	Open circuit or short to positive	=> Page 60
Idling	Short to earth	=> Page 61

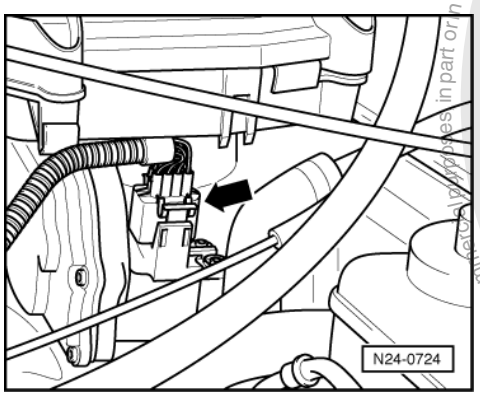

Continuation of check when display constantly shows part throttle

- -> Pull 8 pin connector off throttle valve control part -arrow-.

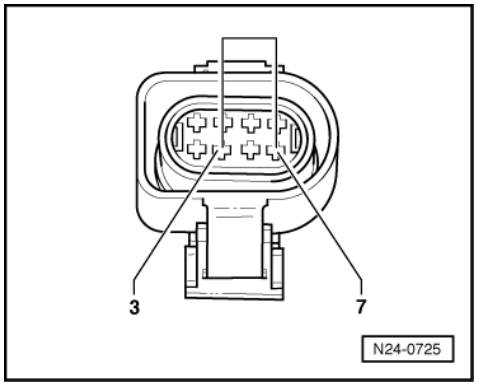

Protected by copyright. Copying for private or commercial purposes, in part or in whole, is not permitted unless authorised by Volkswagen AG. Volkswagen AG does not guarantee or accept any liability with respect to the correctness of information in this document. Copyright by Volkswagen AG.
satelettronica

- -> Bridge connector contacts 3+7 with aux. cables from V.A.G 1594 and observe display.

If display jumps to idling:

- Press the ⇒key.
- Press keys 0 and 6 for the function "End output" and confirm entry with the Q key.
- Switch off ignition.
- Replace throttle valve control part
  =>Page 47 , item 1 .

If display remains on idling:

- Press the ⇒key.
- Press keys 0 and 6 for the function "End output" and confirm entry with the Q key.
- Switch off ignition.
- Check voltage supply of throttle valve control part and wiring to control unit => Page 66 .

If the voltage supply and wiring is OK:

- Replace engine control unit
  => Page 97 .

Continuation of check when display constantly shows idling

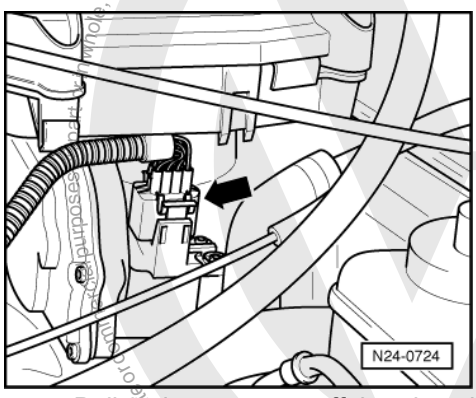

- -> Pull 8 pin connector off throttle valve control part -arrow-.

If display jumps to part throttle:

- Press the ⇒key.
- Press keys 0 and 6 for the function "End output" and confirm entry with the Q key.
- Switch off ignition.
- Replace throttle valve control part
  =>Page 47 , item 1 .

If display remains on part throttle:

- Press the ⇒key.
- Press keys 0 and 6 for the function "End output" and confirm entry with the Q key.
- Switch off ignition.
- Check voltage supply of throttle valve control part and wiring to control unit => Page 66 .

If the voltage supply and wiring is OK:

- Replace engine control unit
  => Page 97 .

satelettronica

Checking throttle valve positioner and throttle valve positioner potentiometer

Test conditions

- Coolant temperature at least 85 °C.

Test sequence

- Connect fault reader V.A.G 1551 (V.A.G 1552). Start engine and select "Address word" 01 of engine control unit. When doing this the engine must be running at idling speed.
  (Connecting fault reader and selecting engine control unit => Page 2 .)

-> Indicated on display:

```
Rapid data transfer      HELP
Select function XX
```

- Press keys 0 and 8 for the function "Read measured value block" and confirm entry with Q key.

-> Indicated on display:

```
Read measured value block      HELP
Input display group number XXX
```

- Press keys 0, 0 and 1 for "Display group number 1" and confirm entry with Q key.

-> Indicated on display:
(1...4 = Display zones)

```
Read measured value block     1
     1     2     3     4
```

- Check whether the coolant temperature is above 85 °C in display zone 2.
- Change to display group 98 as follows:
- Press C key.

-> Indicated on display:

```
Read measured value block      HELP
Input display group number XXX
```

- Press keys 0, 9 and 8 for "Display Group 98" and confirm entry by pressing Q.

-> Indicated on display:
(1...4 = Display zones)

```
Read measured value block 98
     1     2     3     4
```

- Check voltage value from throttle valve positioner sender in display zone 2. The voltage must be between 0.500...5.000 V

If the specification is not obtained:

- Press the ⇒key.
- Press keys 0 and 6 for the function "End output" and confirm entry with the Q key.
- Switch off ignition.

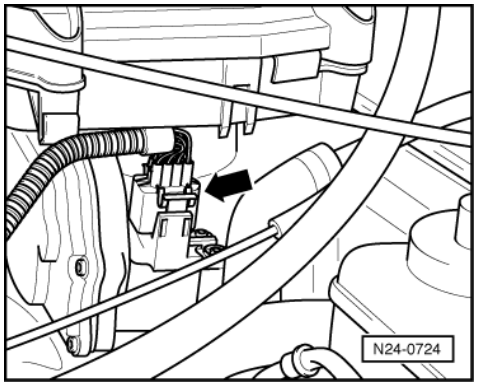

Protected by copyright. Copyright by Volkswagen AG.
Copying for commercial purposes, part or in whole, is not permitted unless authorised by Volkswagen AG. Volkswagen AG does not guarantee or accept any liability with respect to the correctness of information in this document.
satelettronica

- -> Pull 8 pin connector off throttle valve control part -arrow-.

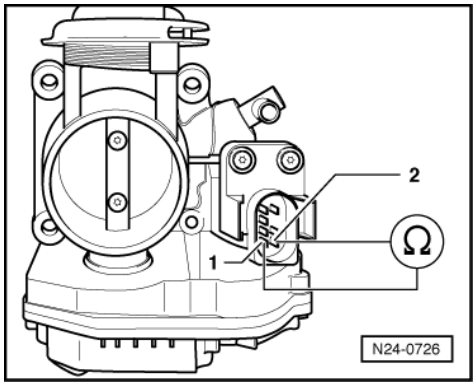

- -> Measure throttle valve positioner resistance between connector contacts 1+2.
  Specification: 3...200 ω

If the specification is not obtained:

- Replace throttle valve control part
  =>Page 47 , item 1 .

If the specification is attained:

- Check voltage supply of throttle valve control part and wiring to control unit => Page 66 .

Checking throttle valve potentiometer

Test conditions

- Coolant temperature at least 85 °C.

Test sequence

- Connect fault reader V.A.G 1551 (V.A.G 1552). Start engine and select "Address word" 01 of engine control unit. When doing this the engine must be running at idling speed.
  (Connecting fault reader and selecting engine control unit => Page 2 .)

-> Indicated on display:

```
Rapid data transfer      HELP
Select function XX
```

- Press keys 0 and 8 for the function "Read measured value block" and confirm entry with Q key.

-> Indicated on display:

```
Read measured value block    HELP
Input display group number XXX
```

- Press keys 0, 0 and 1 for "Display group number 1" and confirm entry with Q key.

-> Indicated on display:
(1...4 = Display zones)

```
Read measured value block      1
     1     2     3     4
```

- Check whether the coolant temperature is above 85 °C in display zone 2.
- Change to display group 3 as follows:
  V.A.G 1551: Press key 3 twice
  V.A.G 1552: Press key ↑ twice

-> Indicated on display:

Protected by copyright. Copying for private or commercial purposes, in part or in whole, is not permitted unless authorised by Volkswagen AG. Volkswagen AG does not guarantee or accept any liability with respect to the correctness of information in this document. Copyright by Volkswagen AG.
satelettronica

(1...4 = Display zones)

```
Read measured value block 3
     1     2     3     4
```

- Read off throttle valve angle in display zone 3.
  Throttle valve in start position: 1...7<°
- Slowly open throttle valve slowly until fully open and observe angle display in display zone 3. The figure must increase uniformly over
  the complete range
  up to a min. 75 <°.
- Press the ⇒key.
- Press keys 0 and 6 for the function "End output" and confirm entry with the Q key.
- Switch off ignition.

Note:

The displayed figure is dependent on the tolerances of the throttle valve potentiometer and does not correspond to the actual opening angle.

If the figure does not increase uniformly:

- Replace throttle valve control part
  =>Page 47 , item 1 .

If the display constantly shows 0 <° or is above 90 <°:

Display	Cause	Continuation of check
0 <°	Open circuit or short to positive	=> Page 64
above 90 <°	Short to earth	=> Page 65

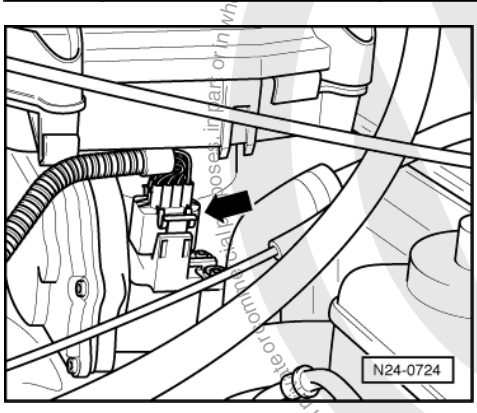

Continuation of check when display shows 0 <°:

- -> Pull 8 pin connector off throttle valve control part -arrow-.

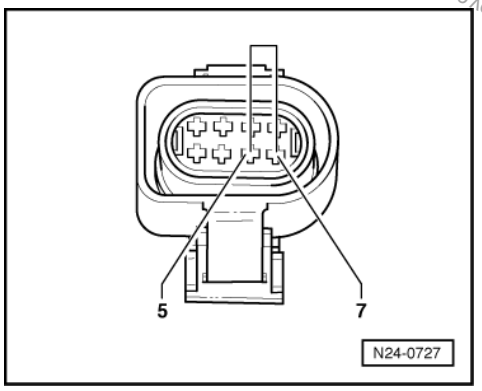

Protected by copyright. Copying for private or commercial purposes, in part or in whole, is not permitted unless authorised by Volkswagen AG. Volkswagen AG does not guarantee or accept any liability with respect to the correctness of information in this document. Copyright by Volkswagen AG.
satelettronica

- -> Bridge connector contacts 5+7 with auxiliary cables from V.A.G 1594 and observe display.

If display jumps above 90 <°:

- Press ⇒key.
- Press keys 0 and 6 for the function "End output" and confirm entry with the Q key.
- Switch off ignition.
- Replace throttle valve control part
  =>Page 47 , item 1 .

If display remains at 0 <°:

- Press ⇒key.
- Press keys 0 and 6 for the function "End output" and confirm entry with the Q key.
- Switch off ignition.
- Check voltage supply of throttle valve control part and wiring to control unit => Page 66 .

If the voltage supply and wiring is OK:

- Replace engine control unit
  => Page 97 .

Continuation of check when display is above 90 <°:

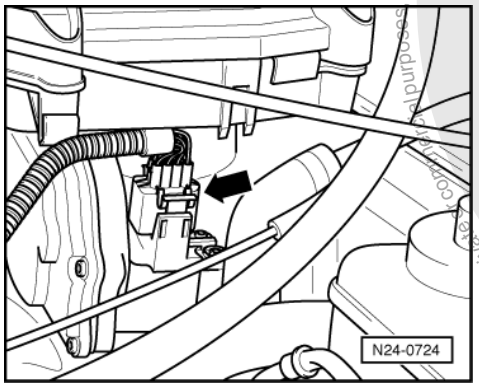

- -> Pull 8 pin connector off throttle valve control part -arrow-.

If display jumps to 0 <°:

- Press ⇒key.
- Press keys 0 and 6 for the function "End output" and confirm entry with the Q key.
- Switch off ignition.
- Replace throttle valve control part
  =>Page 47 , item 1 .

If display remains above 90 <°:

- Press ⇒key.
- Press keys 0 and 6 for the function "End output" and confirm entry with the Q key.
- Switch off ignition.
- Check voltage supply of throttle valve control part and wiring to control unit => Page 66 .

If the voltage supply and wiring is OK:

- Replace engine control unit
  => Page 97 .

Protected by copyright. Copying for private or commercial purposes, in part or in whole, is not permitted unless authorised by Volkswagen AG. Volkswagen AG does not guarantee or accept any liability with respect to the correctness of information in this document. Copyright by Volkswagen AG.
satelettronica

Checking voltage supply and wiring to control unit

Test conditions

- The battery voltage must be at least 11.5 V.

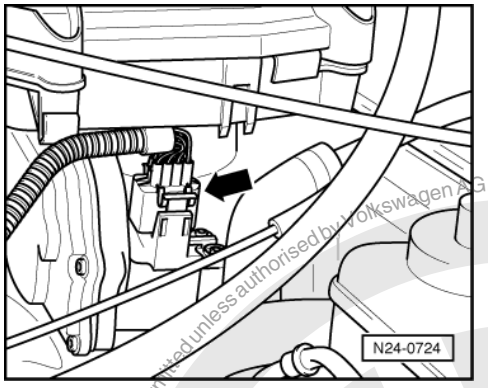

Test sequence

- -> Pull 8 pin connector off throttle valve control part -arrow-.

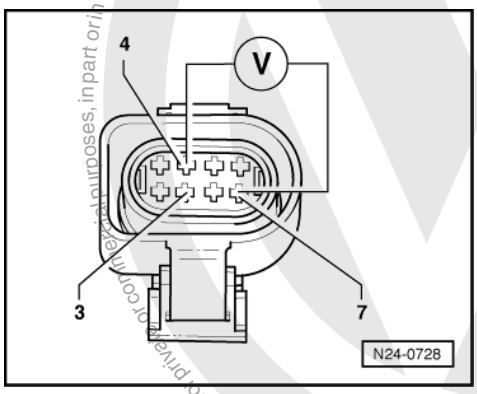

- -> Connect multimeter to measure voltage using aux. cables from V.A.G 1594 to connector contacts 4+7.
- Switch on ignition.
  Specification: min. 4.5 V
- Switch off ignition.
- Connect multimeter to measure voltage at connector contacts 3+7.
- Switch on ignition.
  Specification: min. 9.0 V
- Switch off ignition.

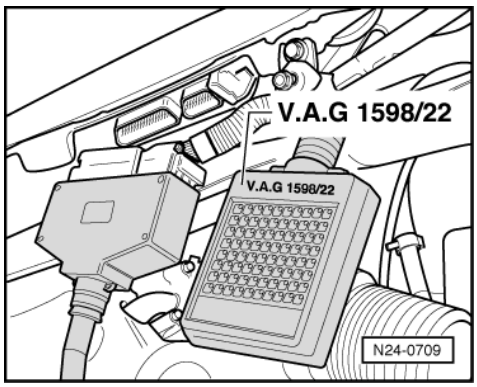

- Remove wiper arms and cowl panel:

Protected by copyright. Copyright by Volkswagen AG.
Volkswagen AG does not guarantee or accept any liability with respect to the correctness of information in this document. Copyright by Volkswagen AG.
Reproduction, in whole or in part, for commercial purposes, is not permitted unless authorised by Volkswagen AG.
satelettronica

=> Electrical system; Repair group 92; windscreen wiper system; removing and installing windscreen wiper system windscreen wiper system removing and installing windscreen wiper system

- -> Connect test box V.A.G 1598/22 to control unit wiring harness.

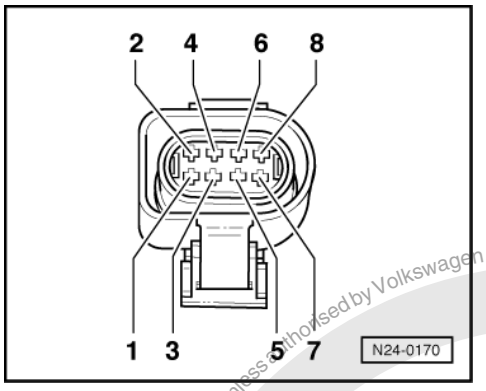

- -> Check wiring between test box and connector for open circuit using current flow diagram.
  Contact 1+socket 66
  Contact 2+socket 59
  Contact 3+socket 69
  Contact 4+socket 64
  Contact 5+socket 75
  Contact 7+socket 67
  Contact 8+socket 74
  Wire resistance: Max. 1.5 ω
- Additionally check wires for short to one another.
  Specification: ∞ω

If no wiring fault is detected:

- Check voltage supply of engine control unit => Page 95 .

2.4 - Checking intake manifold pressure sender

Special tools, workshop equipment, testers, measuring instruments and auxiliary items required

- Fault reader V.A.G 1551 or vehicle system tester V.A.G 1552 with cable V.A.G 1551/3
- Test box V.A.G 1598/22
- Hand multimeter V.A.G 1526 or multimeter V.A.G 1715
- Adapter set V.A.G 1594
- Current flow diagram

Test sequence

- Connect fault reader V.A.G 1551 (V.A.G 1552). Start engine and select "Address word" 01 of engine control unit. When doing this the engine must be running at idling speed.
  (Connecting fault reader and selecting engine control unit => Page 2 .)

-> Indicated on display:

```
Rapid data transfer      HELP
Select function XX
```

- Press keys 0 and 8 for the function "Read measured value block" and confirm entry with Q key.

-> Indicated on display:

```
Read measured value block      HELP
Input display group number XXX
```

Protected by copyright. Copying for private or commercial purposes, in part or in whole, is not permitted unless authorised by Volkswagen AG. Volkswagen AG does not guarantee or accept any liability with respect to the correctness of information in this document. Copyright by Volkswagen AG.
satelettronica

Protected by copyright. Copyright by Volkswagen AG. Volkswagen AG does not guarantee or accept any liability with respect to the correctness of information in this document. Copyright by Volkswagen AG. Private or commercial purposes in part or in whole is not permitted unless authorised by Volkswagen AG.

- Press keys 0, 0 and 3 for "Display group number 3" and confirm entry with Q key.

-> Indicated on display:
(1...4 = Display zones)

```
Read measured value block 3
     1     2     3     4
```

- Read off the displayed value for engine load in display zone 2 and note this value.
- Briefly open throttle valve. The engine load value must increase briefly.

If the display shows constantly 0 % or 99 %:

Display	Cause	Continuation of check
0 %	Open circuit or short to earth	=> Page 68
99 %	Short to positive	=> Page 69

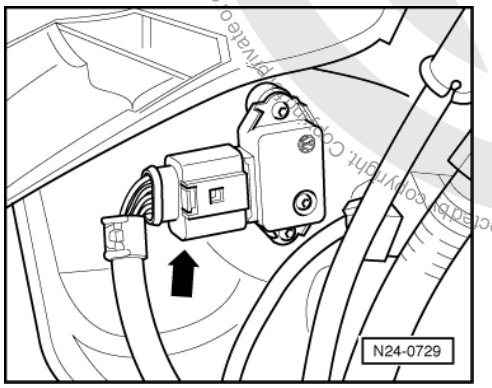

Continuation of check when display 0%:

- -> Pull 4 pin connector off intake manifold pressure sender (G71) with intake air temperature sender (G42) -arrow- (engine can stall).

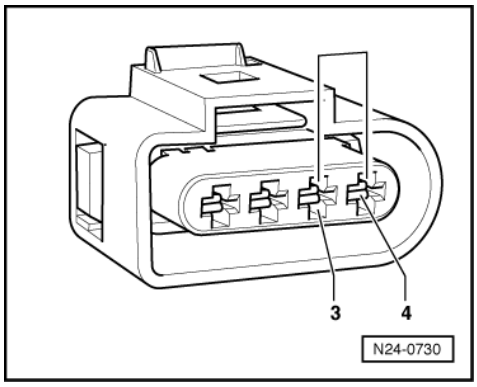

- -> Bridge connector contacts 3+4 with aux. cables from V.A.G 1594 and observe display.

If the display jumps to 99 %:

- Press ⇒key.
- Press keys 0 and 6 for the function "End output" and confirm entry with the Q key.
- Switch off ignition.
- Renew the intake manifold pressure sender (G71) with intake air temperature sender (G42) => Page 48 , item 9 .

If the display remains at 0 %:

- Press ⇒key.

satelettronica

- Press keys 0 and 6 for the function "End output" and confirm entry with the Q key.

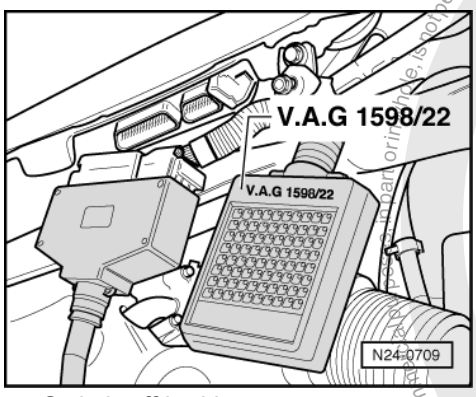

- Switch off ignition.
- Remove wiper arms and cowl panel:

=> Electrical system; Repair group 92; windscreen wiper system; removing and installing windscreen wiper system windscreen wiper system removing and installing windscreen wiper system

- -> Connect test box V.A.G 1598/22 to control unit wiring harness.

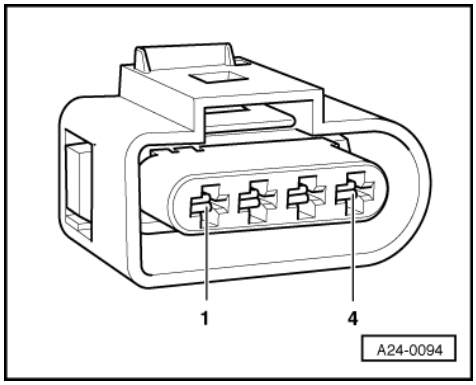

- -> Check wiring between test box and connector for open circuit using current flow diagram.
  Contact 3+socket 62
  Contact 4+socket 61
  Wire resistance: Max. 1.5 ω
- Additionally check wiring contact 4 for short to earth and to contact 1.
  Specification: ∞ω

If no wiring fault is detected:

- Replace engine control unit
  => Page 97 .

Continuation of check when display shows 99 %:

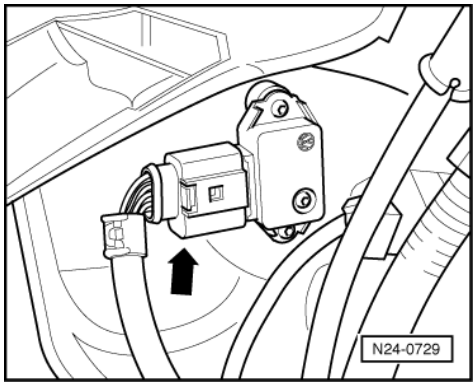

Protected by copyright. Copyright by Volkswagen AG. Volkswagen AG does not guarantee or assume any liability with respect to the correctness of information in this document. Copyright by Volkswagen AG.
satelettronica

Protected by copyright. Copying for private or commercial purposes, in part or in whole, is not permitted unless authorised by Volkswagen AG. Volkswagen AG does not guarantee or accept any liability with respect to the correctness of information in this document. Copyright by Volkswagen AG.

- -> Pull 4 pin connector off intake manifold pressure sender (G71) with intake air temperature sender (G42) -arrow- (engine can stall).

If the display jumps to 0 %:

- Press ⇒key.
- Press keys 0 and 6 for the function "End output" and confirm entry with the Q key.
- Switch off ignition.
- Renew the intake manifold pressure sender (G71) with intake air temperature sender (G42) => Page 48 , item 9 .

If the display remains at 99 %:

- Press the ⇒key.
- Press keys 0 and 6 for the function "End output" and confirm entry with the Q key.
- Switch off ignition.

- Remove wiper arms and cowl panel:

=> Electrical system; Repair group 92; windscreen wiper system; removing and installing windscreen wiper system windscreen wiper system removing and installing windscreen wiper system

- Release connector from control unit and pull off.

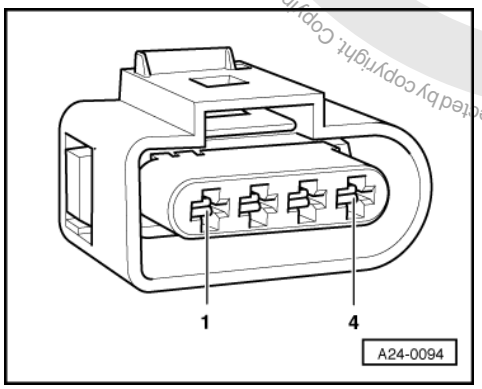

- -> Check wiring to control unit connector at 4 pin connector contact 4 for short to wire contact 3 and to battery positive.
  Specification: ∞ω

If no wiring fault is detected:

- Replace engine control unit => Page 97 .

2.5 - Checking intake air temperature sender

Special tools, workshop equipment, testers, measuring instruments and auxiliary items required

- Fault reader V.A.G 1551 or vehicle system tester V.A.G 1552 with cable V.A.G 1551/3
- Test box V.A.G 1598/22
- Hand multimeter V.A.G 1526 or multimeter V.A.G 1715
- Adapter set V.A.G 1594
- Current flow diagram
- Chilling spray (commercially available)

Test sequence

- Connect the fault reader V.A.G 1551 (V.A.G 1552). Then switch ignition on and select engine control unit with the "Address word" 01.

satelettronica

(Connecting fault reader and selecting engine control unit => Page 2 .)

-> Indicated on display:

```
Rapid data transfer      HELP
Select function XX
```

- Press keys 0 and 8 for the function "Read measured value block" and confirm entry with Q key.

-> Indicated on display:

```
Read measured value block      HELP
Input display group number XXX
```

- Press keys 0, 0 and 2 for "Display group number 2" and confirm entry with Q key.

-> Indicated on display:
(1...4 = Display zones)

```
Read measured value block 2
     1     2     3     4
```

- Read off intake air temperature value in display zone 4.

Display	Cause	Continuation of check
Constant 45 °C	Open circuit, short to positive or short to earth	=> Page 71
Approx. ambient temperature1)	---	=> Page 72

1) If a temperature is displayed which is below the ambient air temperature of the sender, check sender wiring for transfer resistances. Note when doing this that sender is heated from external sources, e.g. radiated heat when engine is not running.

Continuation of check when display shows constant 45 °C:

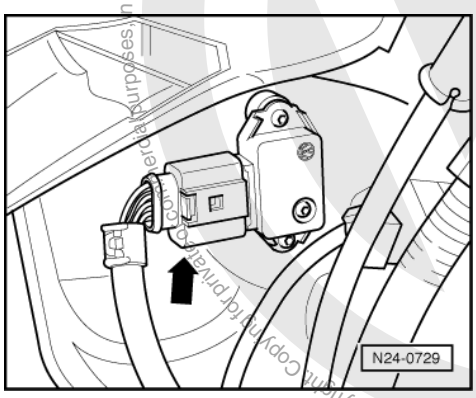

- Press ⇒key.
- Press keys 0 and 6 for the function "End output" and confirm entry with the Q key.
- Switch off ignition.
- -> Pull 4 pin connector off intake air temperature sender (G42) with intake manifold pressure sender (G71) -arrow-.
- Remove wiper arms and cowl panel:

=> Electrical system; Repair group 92; windscreen wiper system; removing and installing windscreen wiper system windscreen wiper system removing and installing windscreen wiper system

satelettronica

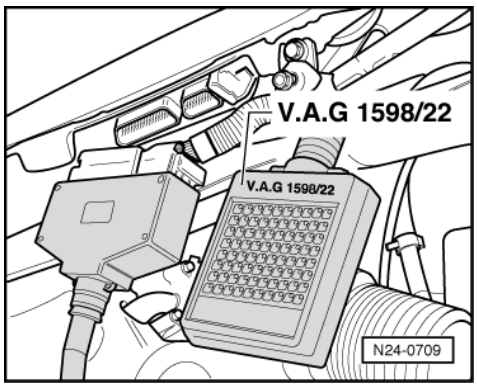

- -> Connect test box V.A.G 1598/22 to control unit wiring harness.

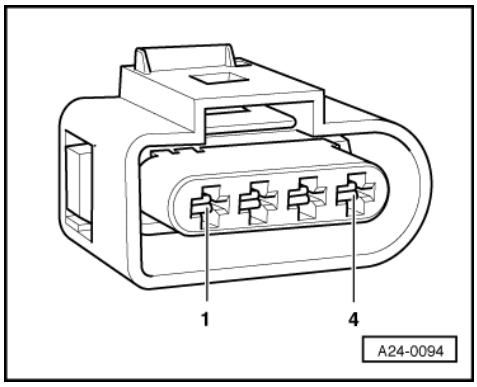

- -> Check the wiring between test box and 4 pin connector -1- for open circuit using current flow diagram.
  Contact 1+socket 67
  Contact 2+socket 54
  Wire resistance: Max. 1.5 ω
- Check wiring additionally for short circuit to battery positive.
  Specification: ∞ω

If no wiring fault is detected:

- Renew the intake manifold pressure sender (G71) with intake air temperature sender (G42)
  => Page 48 , item 9 .

Continuation of check when display = ambient temperature:

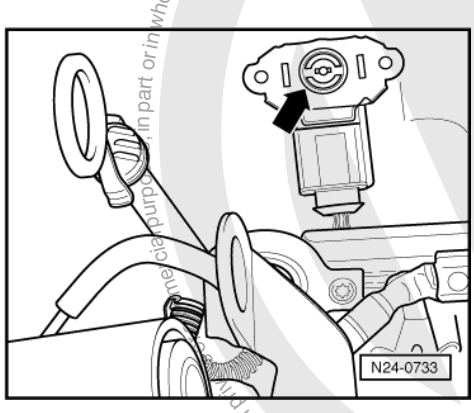

Functional check of sender

- Remove air cleaner => Page 55 , Fig. 3 .
- -> Remove intake air temperature sender together with intake manifold pressure sender (connector remains connected).

Protected by copyright. Copying for private or commercial purposes, in part or in whole, is not permitted unless authorised by Volkswagen AG. Volkswagen AG does not guarantee or accept any liability with respect to the correctness of information in this document. Copyright by Volkswagen AG.

satelettronica

- Note intake air temperature value in display zone 4.

- Spray sender with commercial chilling agent whilst observing the temperature value. The temperature value must
  decrease.
- Press ⇒key.
- Press keys 0 and 6 for the function "End output" and confirm entry with the Q key.
- Switch off ignition.

If the specification is not obtained:

- Renew the intake manifold pressure sender (G71) with intake air temperature sender (G42)
  => Page 48 ,item 9 .

2.6 - Checking coolant temperature sender

Special tools, workshop equipment, testers, measuring instruments and auxiliary items required

- Fault reader V.A.G 1551 or vehicle system tester V.A.G 1552 with cable V.A.G 1551/3
- Test box V.A.G 1598/22
- Hand multimeter V.A.G 1526 or multimeter V.A.G 1715
- Adapter set V.A.G 1594
- Current flow diagram

Test sequence

- Connect the fault reader V.A.G 1551 (V.A.G 1552). Then switch ignition on and select engine control unit with the "Address word" 01.
  (Connecting fault reader and selecting engine control unit => Page 2 .)

-> Indicated on display:

```
Rapid data transfer      HELP
Select function XX
```

- Press keys 0 and 8 for the function "Read measured value block" and confirm entry with Q key.

-> Indicated on display:

```
Read measured value block      HELP
Input display group number XXX
```

- Press keys 0, 0 and 1 for "Display group number 1" and confirm entry with Q key.

-> Indicated on display:
(1...4 = Display zones)

```
Read measured value block     1
     1     2     3     4
```

- Note coolant temperature value in display zone 2.

Display	Cause	Continuation of check
Constant 50 °C	Open circuit, short to positive or short to earth	=> Page 74
Approx. coolant temperature1)	---	Only if sporadic faults have been detected:2) => Page 75

Protected by copyright. Copying for private or commercial purposes, in part or in whole, is not permitted unless authorised by Volkswagen AG. Volkswagen AG does not guarantee or accept any liability with respect to the correctness of information in this document. Copyright by Volkswagen AG.
satelettronica

1) If a temperature is displayed which deviates greatly from the ambient temperature of the sender, check sender wiring for transfer resistances.

2) Check is only possible when the engine is cold.

Continuation of check when display shows constant 50 °C:

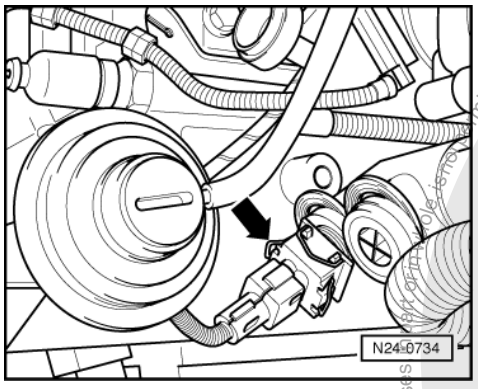

- Press ⇒key.
- Press keys 0 and 6 for the function "End output" and confirm entry with the Q key.
- Switch off ignition.
- -> Pull the 4 pin connector off coolant temperature sender (G62) with coolant temperature gauge sender (G2) -arrow-.
- Remove wiper arms and cowl panel:

=> Electrical system; Repair group 92; windscreen wiper system; removing and installing windscreen wiper system windscreen wiper system removing and installing windscreen wiper system

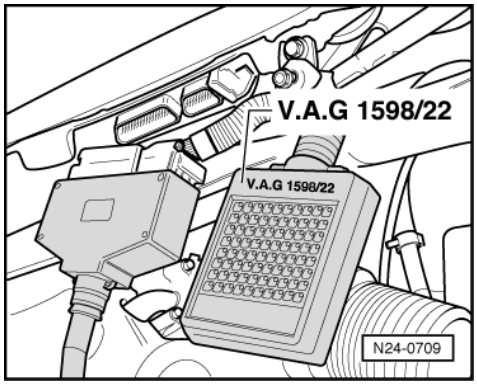

- -> Connect test box V.A.G 1598/22 to control unit wiring harness.

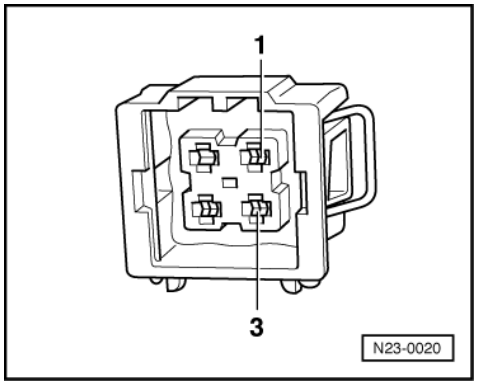

- -> Check the wiring between test box and 4 pin connector for open circuit using current flow diagram.
  Contact 1+socket 67
  Contact 3+socket 53
  Wire resistance: Max. 1.5 ω
- Check wiring additionally for short circuit to battery positive.

Protected by copyright. Copying for private or commercial purposes, in part or in whole, is not permitted unless authorised by Volkswagen AG. Volkswagen AG does not guarantee or accept any liability with respect to the correctness of information in this document. Copyright by Volkswagen AG.
satelettronica

Specification: ∞ω

If no wiring fault is detected:

- Replace coolant temperature sender (G62) with coolant temperature gauge sender (G2) =>Page 42 , item 19 .

Continuation of check when display = coolant temperature:

Test conditions

- Engine must be cold.

Functional check of sender

- Connect fault reader V.A.G 1551 (V.A.G 1552). Start engine and select "Address word" 01 of engine control unit. When doing this the engine must be running at idling speed.
  (Connecting fault reader and selecting engine control unit => Page 2 .)

-> Indicated on display:

```
Rapid data transfer      HELP
Select function XX
```

- Press keys 0 and 8 for the function "Read measured value block" and confirm entry with Q key.

-> Indicated on display:

```
Read measured value block      HELP
Input display group number XXX
```

- Press keys 0, 0 and 1 for "Display group number 1" and confirm entry with Q key.

-> Indicated on display:
(1...4 = Display zones)

```
Read measured value block      1
     1      2      3      4
```

- Observe coolant temperature value in display zone 2, whilst engine is running. The temperature figure must increase uniformly and without interruption.

Notes:

- If the display on fault reader jumps by 2...5 °C, it is a control unit fault and not caused by a defective sender.
- If irregular engine running occurs in certain temperature ranges and the temperature figure does not increase without interruption, the temperature signal is temporarily interrupted and the sender must be renewed.

- Press ⇒key.
- Press keys 0 and 6 for the function "End output" and confirm entry with the Q key.
- Switch off ignition.

If the specification is not obtained:

- Replace coolant temperature sender (G62) with coolant temperature gauge sender (G2) =>Page 42 , item 19 .

2.7 - Checking engine speed sender

The engine speed sender (G28) is a speed and reference mark sender. If the speed signal fails when the engine is running, it can cause the engine to stall.

Protected by copyright. Copying for private or commercial purposes, in part or in whole, is not permitted unless authorised by Volkswagen AG. Volkswagen AG does not guarantee or accept any liability with respect to the correctness of information in this document. Copyright by Volkswagen AG.
satelettronica

Protected by copyright. Copying for private or commercial purposes, in part or in whole, is not permitted unless authorised by Volkswagen AG. Volkswagen AG does not guarantee or accept any liability with respect to the correctness of information in this document. Copyright by Volkswagen AG.

Special tools, workshop equipment, testers, measuring instruments and auxiliary items required

- Test box V.A.G 1598/22
- Hand multimeter V.A.G 1526 or multimeter V.A.G 1715
- Adapter set V.A.G 1594
- Current flow diagram

Test conditions

- The battery voltage must be at least 11.5 V.

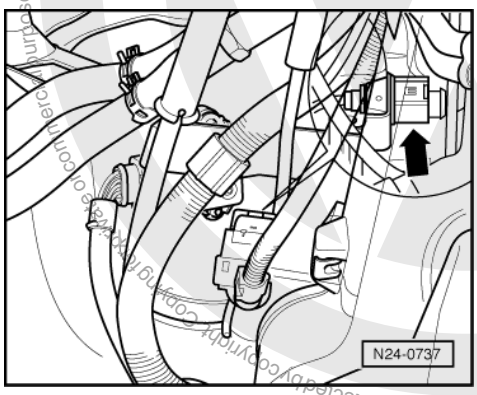

Test sequence

- -> Detach grey 3 pin connector to engine speed sender -arrow- (on right of intake manifold).

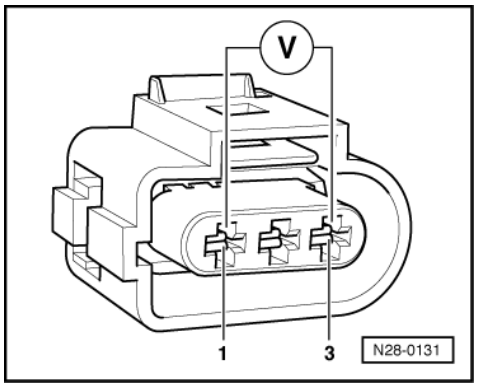

- -> Connect multimeter to measure voltage using aux. cables from V.A.G 1594 to contacts 1 (positive) and 3 (earth) on engine speed sender connector.
- Switch on ignition.
  Specification: min. 4.5 V
- Switch off ignition.

If no voltage is present:

- Remove wiper arms and cowl panel:

=> Electrical system; Repair group 92; windscreen wiper system; removing and installing windscreen wiper system windscreen wiper system removing and installing windscreen wiper system

satelettronica

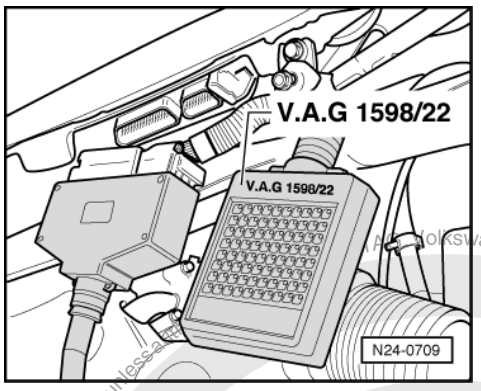

- -> Connect test box V.A.G 1598/22 to control unit wiring harness.

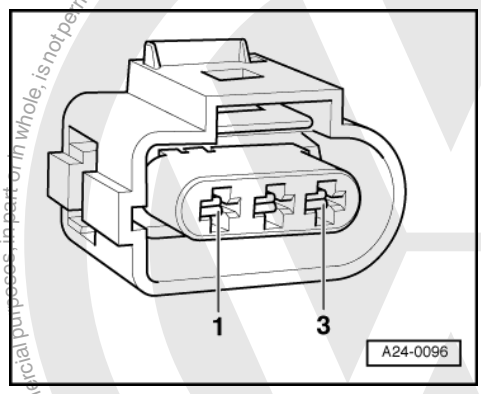

- -> Check wiring between test box and 3 pin connector for open circuit using current flow diagram.
  Contact 1+socket 56
  Contact 2+socket 63
  Contact 3+socket 67
  Wire resistance: Max. 1.5 ω
- Additionally check wires for short to one another.
  Specification: ∞ω

If no wiring fault is detected and voltage was present between contacts 1+3:

- Replace engine speed sender (G28)
  =>Page 40 , item 12 .

If no wiring fault is detected and no voltage was present between contacts 1+3:

- Replace engine control unit
  => Page 97 .

2.8 - Checking injectors

Checking activation

Special tools, workshop equipment, testers, measuring instruments and auxiliary items required

- Test box V.A.G 1598/22
- Hand multimeter V.A.G 1526 or multimeter V.A.G 1715
- Diode test lamp V.A.G 1527
- Adapter set V.A.G 1594

Volkswagen AG does not guarantee or accept any liability with respect to the correctness of information in this document. Copyright by Volkswagen AG.
Copyright by Volkswagen AG, in part or in whole, is not permitted unless authorised. Unauthorised use or commercial purposes is prohibited and could be prosecuted by law.
satelettronica

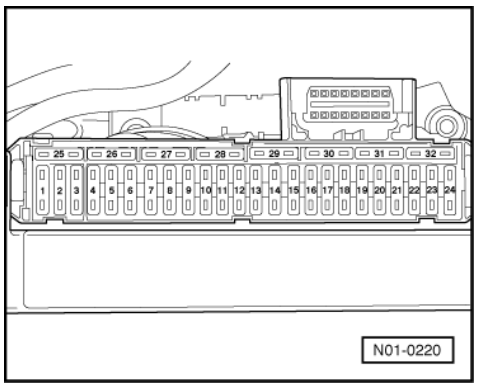

◆ Current flow diagram

Check conditions

- -> Fuse 8 must be OK.
- Earth connection between engine (on gearbox bell housing) and body (below battery) OK.
- Earth connection in plenum chamber OK.
- The battery voltage must be at least 11.5 V.
- Engine speed sender must be OK, checking Page 75 .

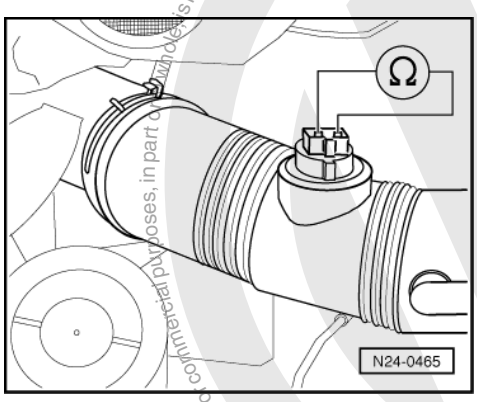

- Hall sender must be OK, checking =>Page 114 .
- Fuel pump relay must be OK

Test sequence

- -> Remove cover above camshaft housing -arrows-.

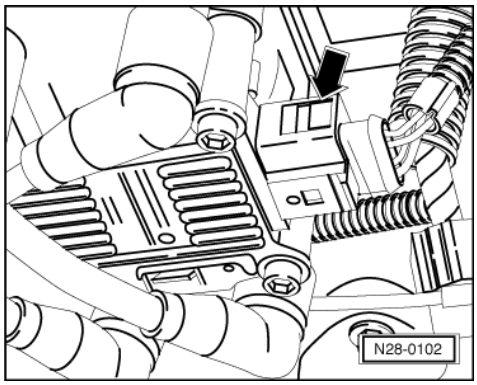

- -> Pull 4 pin connector off ignition transformer -arrow-.

Protected by copyright. Copyright by Volkswagen AG. Copying for private or commercial purposes, in part or in whole, is not permitted unless authorised by Volkswagen AG. Volkswagen AG does not guarantee or accept any liability with respect to the correctness of information in this document.
satelettronica

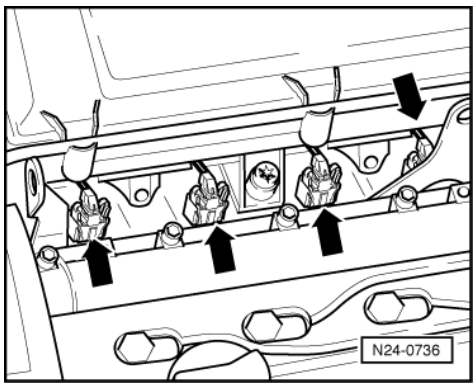

- -> Pull plug -arrows- off all injectors.

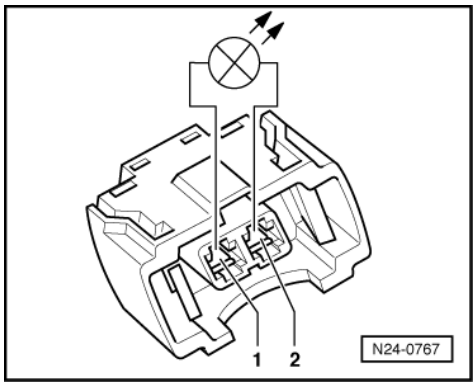

- -> Connect diode test lamp V.A.G 1527 using aux. cables from V.A.G 1594 to connector contacts of Cyl. 1.
- Operate the starter and check the voltage supply for No. 1 cylinder injector.
  The LED must light up
- Repeat check at the injector connectors for Cyls. 2...4.
- Switch off ignition.

If the LED does not light up on any cylinder:

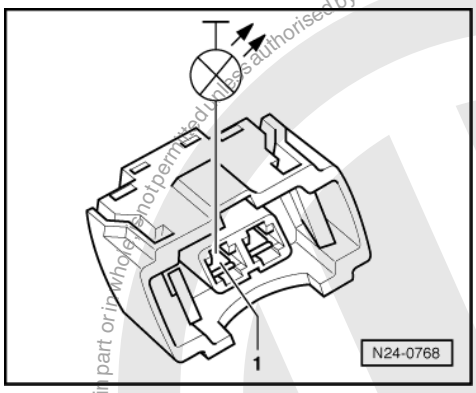

- -> Connect diode test lamp to Cyl. 1 connector, contact 1 and earth.
  The LED must light up
- Repeat check at the injector connectors for Cyls. 2...4.

If the LED does not light up:

- Switch off ignition.
- Check wire between 2 pin connector contact 1 and fuel pump relay (J17) for open circuit according to current flow diagram.
  Wire resistance: max. 1.5 ω

If the LED lights up on one or several cylinders:

Protected by copyright. Copying for private or commercial purposes, in part or in whole, is not permitted unless authorised by Volkswagen AG. Volkswagen AG does not guarantee or accept any liability with respect to the correctness of information in this document. Copyright by Volkswagen AG.

satelettronica

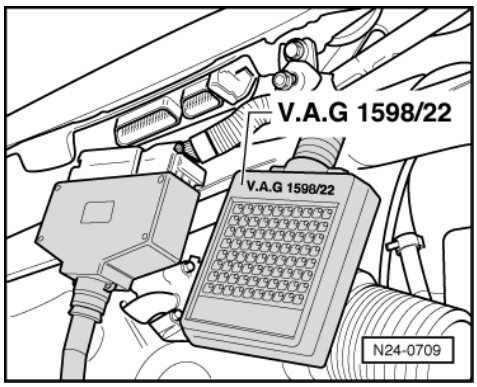

- Remove wiper arms and cowl panel:

=> Electrical system; Repair group 92; windscreen wiper system; removing and installing windscreen wiper system windscreen wiper system removing and installing windscreen wiper system

- -> Connect test box V.A.G 1598/22 to control unit wiring harness.

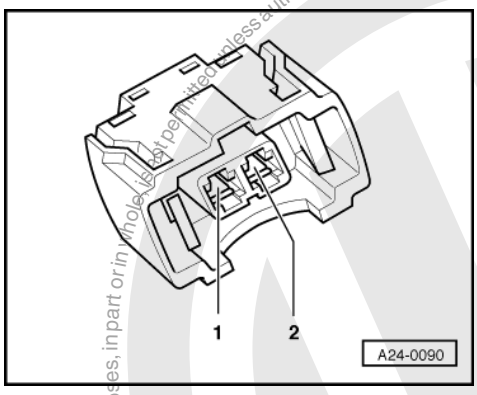

- -> Check wiring between test box and the injector 2 pin connectors for open circuit using current flow diagram.
  - Injector 1: Contact 2+socket 73
  - Injector 2: Contact 2+socket 80
  - Injector 3: Contact 2+socket 58
  - Injector 4: Contact 2+socket 65
  - Wire resistance: Max.1.5 ω
- Additionally check wires for short to one another.
  - Specification: ∞ω
- Check wiring between connector contacts 1 of injectors for open circuit to one another.
  - Wire resistance: Max. 1.5 ω

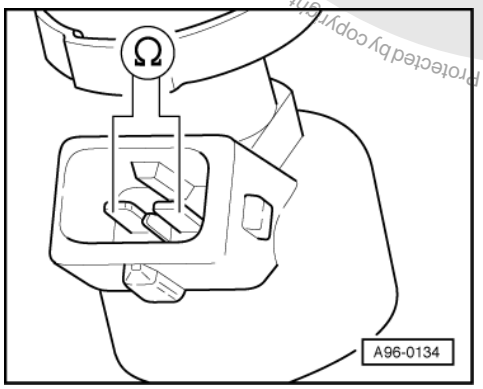

Protected by copyright. Copyright by Volkswagen AG.
For educational purposes, in part or in whole, is not permitted unless authorised by Volkswagen AG. Volkswagen does not guarantee or accept any liability with respect to the correctness of information in this document.
satelettronica

Checking resistance of injectors

Test sequence

- -> Check resistance of injectors individually
  Specification: 14.0...17.0 ω(at 20° C)

When the engine is warm the resistance will be approx. 4...6 ωhigher.

If the specification is not attained:

- Renew defective injector
  Page 50 , item 7 .

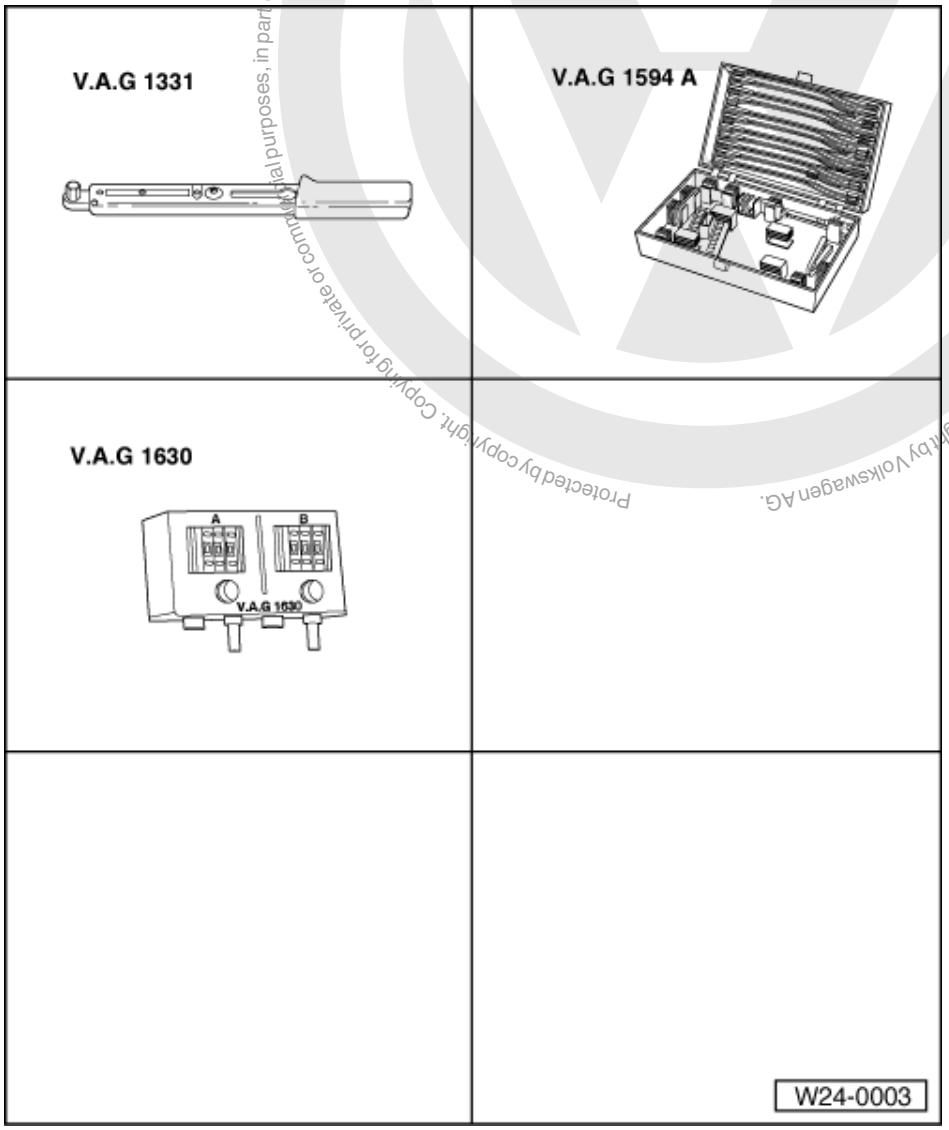

Checking spray pattern and for leaks

Special tools, workshop equipment, test and measuring appliances and aux. items required

- V.A.G 1331 Torque wrench (5...50 Nm)
- V.A.G 1594 A Adapter set
- V.A.G 1630 Digital potentiometer

Protected by copyright. Copying for private or commercial purposes, in part or in whole, is not permitted unless authorised by Volkswagen AG. Volkswagen AG does not guarantee or accept any liability with respect to the correctness of information in this document. Copyright by Volkswagen AG.
satelettronica

- Measuring container

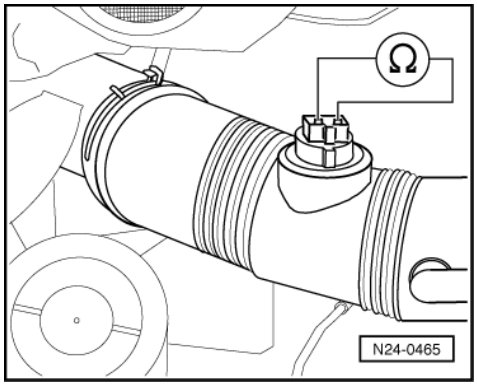

Test conditions

- The fuel pressure must be in order, checking
  => Page 84 , checking fuel pressure regulator and holding pressure.

Test sequence

- -> Remove cover above camshaft housing -arrows-.
- Remove air cleaner => Page 55 , Fig. 3 .

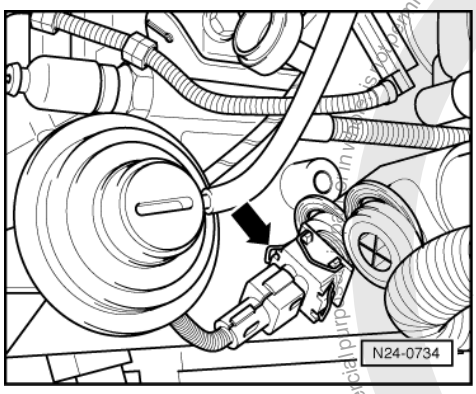

- -> Pull the 4 pin connector off coolant temperature sender (G62) with coolant temperature gauge sender (G2) -arrow-.

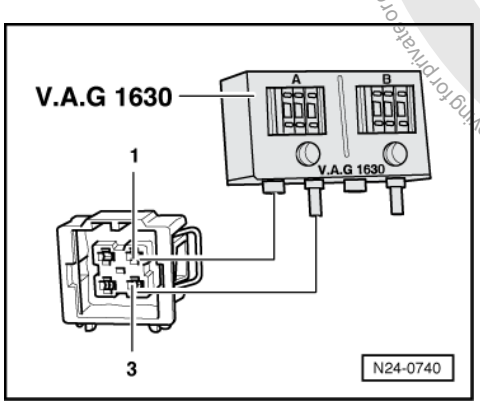

- -> Connect digital potentiometer V.A.G 1630 using aux. cables from V.A.G 1594 to connector contacts 1+3 and set connected side to 15 kω.

Protected by copyright. Copying for private or commercial purposes is not permitted unless authorised by Volkswagen AG. Volkswagen AG does not guarantee or accept any liability with respect to the correctness of information in this document. Copyright by Volkswagen AG.
satelettronica

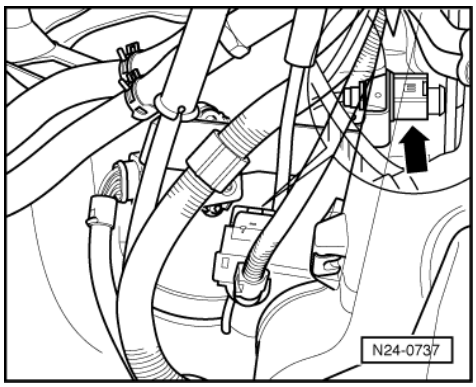

- -> Detach grey 3 pin connector to engine speed sender -arrow- (on right of intake manifold).
- Unclip the wiring harness for the injectors from intake manifold and thermostat housing.

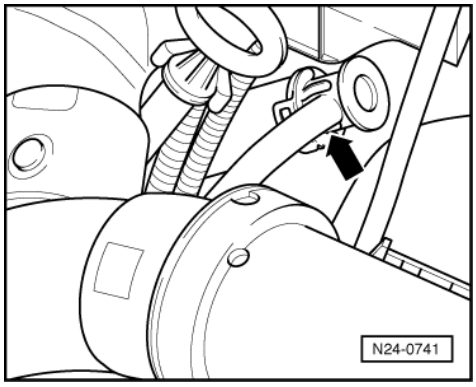

- -> Pull the vacuum hose off fuel pressure regulator -arrow-.
- Remove fuel rail complete with all injectors from intake manifold (fuel hoses remain connected)
  Page 39 , item 7 .

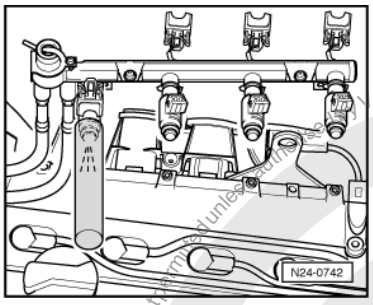

- -> Hold a small container under the injector to be checked and pull connectors off all other injectors.
- Operate starter, using a 2nd person. Injector must spray pulsatingly.
- Repeat check with other injectors ensuring that injector to be checked is only connected.
- Switch off ignition and afterwards check injectors for leaks. No more than
  2 drops/min
  may leak from each injector.

If the fuel loss is greater:

- Switch off ignition.
- Renew defective injector
  Page 50 , item 7 .

Perform installation of injectors in reverse order. When doing this note the following:

- Renew O-rings on all injectors and lightly moisten with clean engine oil.
- Fit fuel rail with secured injectors onto intake manifold and tighten evenly.

Protected by copyright. Copying for private or commercial purposes, in part or in whole, is not permitted unless authorised by Volkswagen AG. Volkswagen AG does not guarantee or accept any liability with respect to the correctness of information in this document. Copyright by Volkswagen AG.
satelettronica

2.9 - Checking fuel pressure regulator and holding pressure

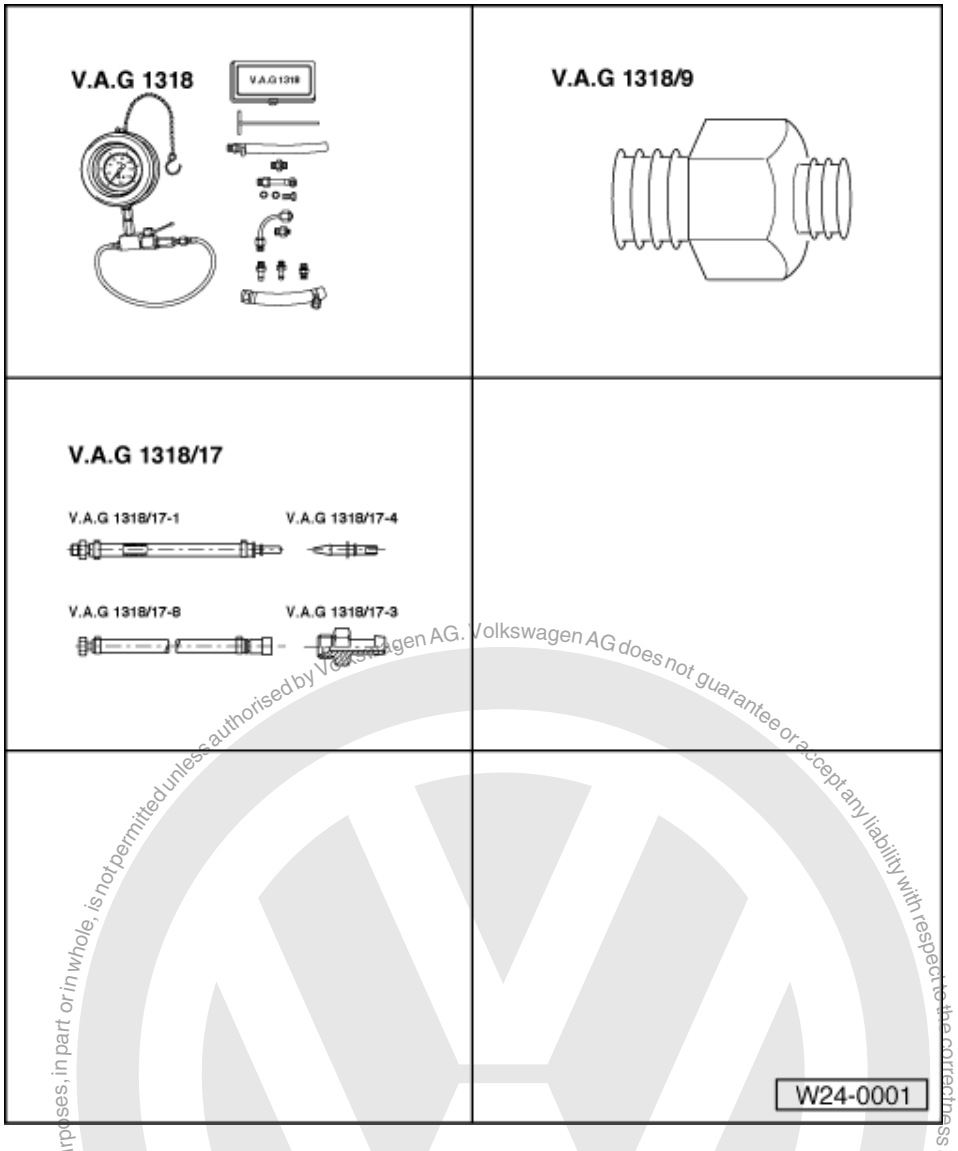

The fuel pressure regulator regulates the fuel pressure depending on intake manifold pressure.

The specification for the check is dependent upon the working pressure of the fuel pump. This is

approx. 3.0 bar

Special tools, workshop equipment, test and measuring appliances and aux. items required

- V.A.G 1318 Pressure gauge
- 1318/9 Adapter
- 1318/17 Adapter

Protected by copyright. Copying for private or commercial purposes, in part or in whole, is not permitted unless authorised by Volkswagen AG. Volkswagen AG does not guarantee or accept any liability with respect to the correctness of information in this document. Copyright by Volkswagen AG.

satelettronica

Copyright by Volkswagen AG. Volkswagen AG does not guarantee or accept any liability with respect to the correctness of information in this document. Copying for private or commercial purposes, in part or in whole, is not permitted unless authorised by Volkswagen AG.

Test sequence

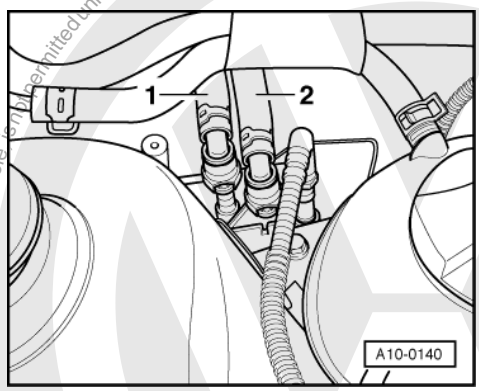

- -> Pull off the supply hose -1- (with white marking) and catch the fuel which runs out in a cloth.

Warning!
Fuel system is under pressure! Before opening the system place a cloth around the connection. Then release pressure by carefully loosening the connection.

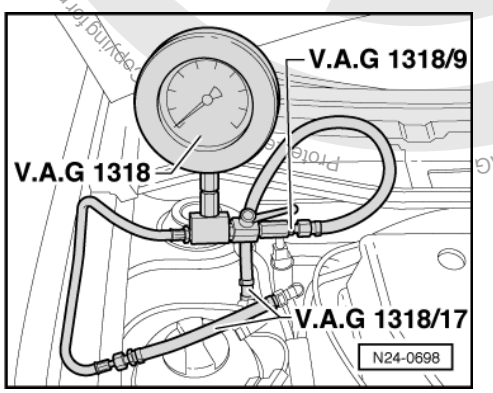

- -> Connect pressure gauge V.A.G 1318 to the supply pipe and to supply hose to fuel rail using adapters V.A.G 1318/9 and V.A.G 1318/17.
- Open shut-off tap on pressure gauge. The handle points in direction of flow.
- Start the engine and run at idling speed.
- Measure fuel pressure.
  Specification: Approx. 2.5 bar

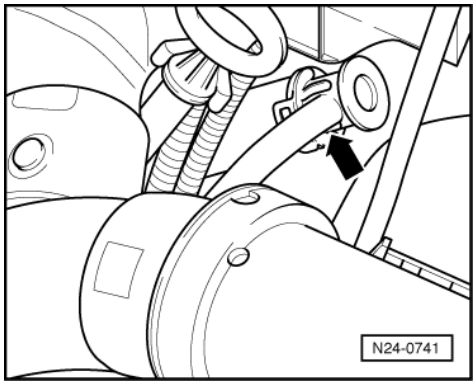

- -> Pull vacuum hose off fuel pressure regulator -arrow-. The fuel pressure must increase to approx. 3.0 bar.
- Switch off ignition.

If the specification is not obtained:

- Check quantity supplied by fuel pump.

satelettronica

=> Rep. Gr. 20; Removing and installing parts of fuel system; checking fuel pump

If the specification is attained:

- Check for leaks and holding pressure by observing pressure drop on gauge. After 10 minutes there must be
  a residual pressure of
  at least 2.0 bar.

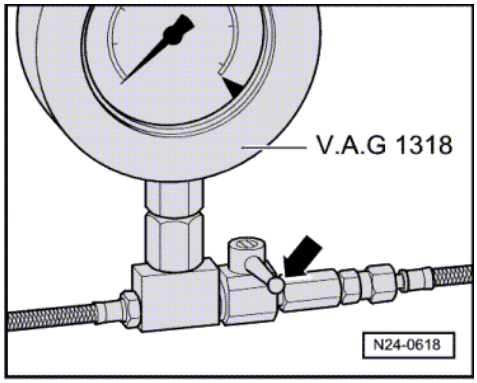

If the holding pressure drops below 2 bar:

- Start the engine and run at idling speed.
- -> Switch ignition off after the pressure has built-up. At the same time close pressure measured device cut-off tap (handle cross throughflow direction -arrow-).
- Observe pressure drop on gauge.

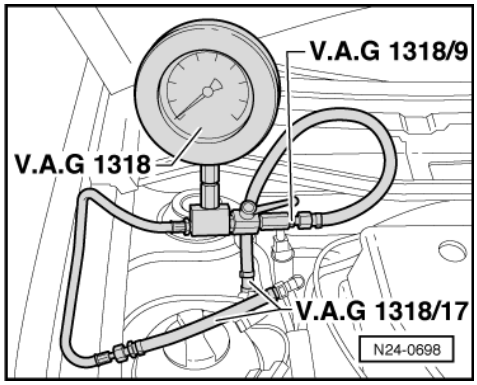

If the pressure does not drop:

- Check fuel pump non-return valve.

=> Rep. Gr. 20; Removing and installing parts of fuel system; checking fuel pump

If the pressure drops again:

- -> Open pressure gauge V.A.G 1318 shut-off tap (handle in throughflow direction).
- Start the engine and run at idling speed.

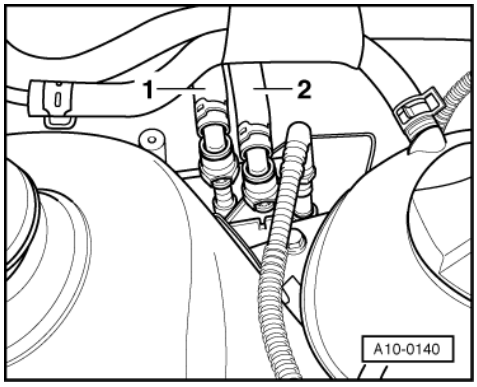

satelettronica
Protected by copyright. Copying for private or commercial purposes, in part or in whole, is not permitted unless authorised by Volkswagen AG. Volkswagen AG does not guarantee or accept any liability with respect to the correctness of information in this document. Copyright by Volkswagen AG.

- -> Switch ignition off after the pressure has build-up. At the same time clamp-off the return hose (with blue marking) -2-.

If the pressure does not drop:

- Renew fuel pressure regulator
  =>Page 51 , item 11 .

If the pressure drops again:

- Check pipe connections, O-rings on fuel manifold and injectors for leaks.
- Check pressure gauge for leaks.

Note:

Before removing pressure gauge place a cloth around the connections to be loosened.

2.10 - Checking intake air system for leaks (unmetered air)

Checking with engine leak detector spray G 001 800 A1

Special tools, workshop equipment, testers, measuring instruments and auxiliary items required

- Fault reader V.A.G 1551 or vehicle system tester V.A.G 1552 with cable V.A.G 1551/3
- Engine leak detector spray G 001 800 A1

Test conditions

- Coolant temperature must be at least 85 °C, =>display group 1, display zone 2.

Test sequence

Notes:

- The vacuum in the intake system will cause the leak detector spray to be drawn in with the unmetered air. The leak detector spray reduces the ignitability of the mixture. This leads to a drop in engine speed and to a change of Lambda probe voltage.
- The safety precautions listed on the container must be adhered to.

- Connect fault reader V.A.G 1551 (V.A.G 1552). Start engine and select "Address word" 01 of engine control unit. When doing this the engine must be running at idling speed.
  (Connecting fault reader and selecting engine control unit => Page 2 .)

-> Indicated on display:

```
Rapid data transfer     HELP
Select function XX
```

- Press keys 0 and 8 for the function "Read measured value block" and confirm entry with Q key.

-> Indicated on display:

```
Read measured value block     HELP
Input display group number XXX
```

- Press keys 0, 0 and 1 for "Display group number 1" and confirm entry with Q key.

-> Indicated on display:
(1...4 = Display zones)

```
Read measured value block     1
     1     2     3     4
```

satelettronica

Only continue with the test when

- The coolant temperature is above 85 °C
  -Display zone 2-

- Observe the engine speed in display zone 1 and the Lambda probe voltage in display zone 3.
- Systematically spray parts of the intake system with engine leak detector spray.

If the engine speed drops or the Lambda probe voltage changes:

- Press ⇒key.
- Press keys 0 and 6 for the function "End output" and confirm entry with the Q key.
- Switch off ignition.
- Check sprayed areas of intake system for leaks and rectify if necessary.

Engine speed or Lambda probe voltage does not change:

- Press ⇒key.
- Press keys 0 and 6 for the function "End output" and confirm entry with the Q key.
- Switch off ignition.

2.11 - Checking intake air preheating

Special tools, workshop equipment, testers, measuring instruments and auxiliary items required

- Chilling spray (commercially available)

Checking regulating flap

- Remove air cleaner intake support.

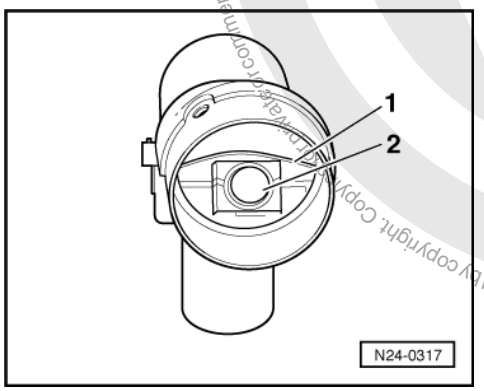

- -> Check control flap position -1-.
  - Above +23 °C flap must close warm air connection
  - Below +10 °C flap opens warm air connection

Note:

The function of the thermo element -2- can be checked easily by spraying with a commercial chilling agent.

Protected by copyright. Copyright by Volkswagen AG.
Volkswagen AG does not guarantee or accept any liability with respect to the correctness of information in this document.
Copyright by Volkswagen AG. Volkswagen AG does not guarantee or accept any liability with respect to the correctness of information in this document. Copyright by Volkswagen AG. Reproduction in whole or in part is not permitted unless authorised by Volkswagen AG. Volkswagen AG does not guarantee or accept any liability with respect to the correctness of information in this document. Copyright by Volkswagen AG. Reproduction in whole or in part is not permitted unless authorised by Volkswagen AG. Volkswagen AG does not guarantee or accept any liability with respect to the correctness of information in this document. Copyright by Volkswagen AG.
satelettronica

2.12 - Wire routing engine wiring loom

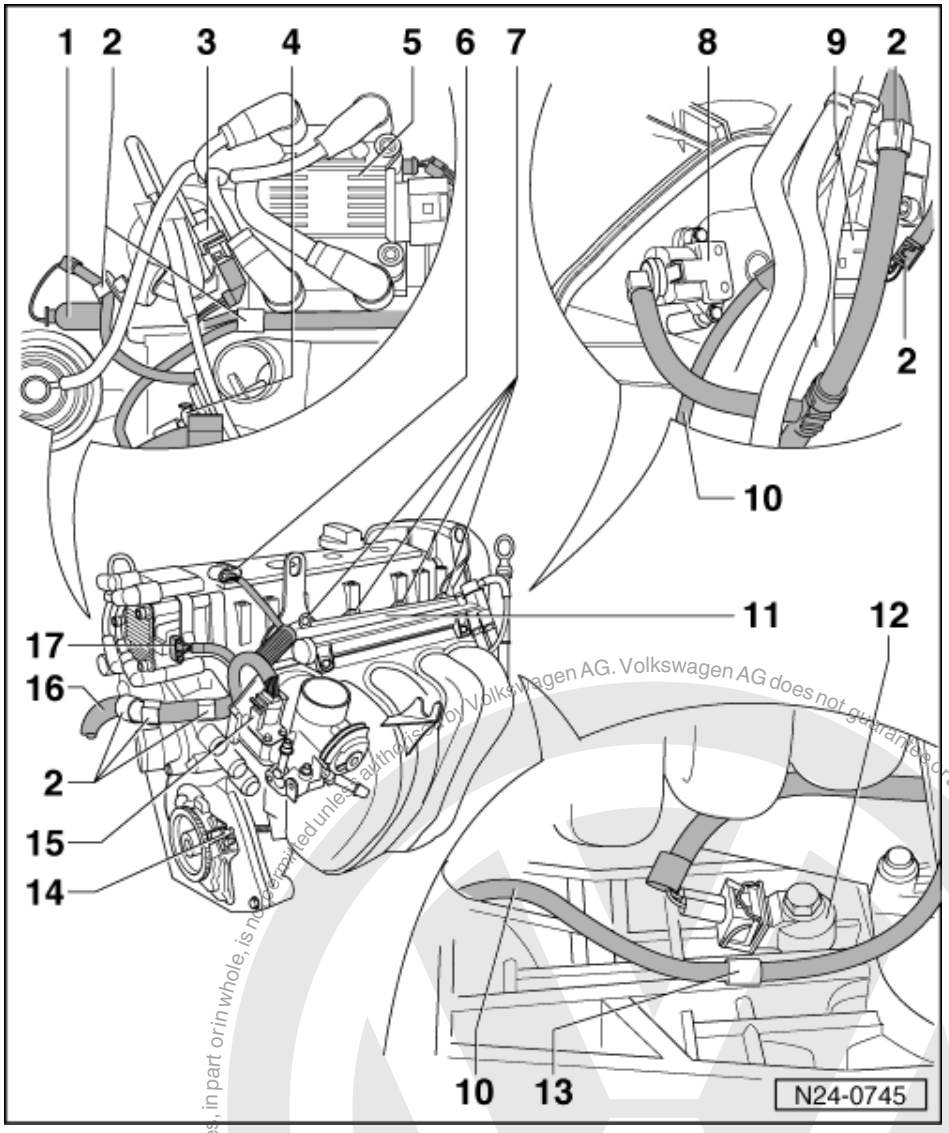

1 Oil pressure switch (F1)
2 Securing clip
3 Exhaust gas recirculation valve (N18)1)
4 Coolant temperature sender (G62)
- Blue
- With coolant temperature gauge sender (G2)

5 Ignition transformer (N152)
6 Hall sender (G40)
7 Injectors (N30...N33)
8 Intake manifold pressure sender (G71) with intake air temperature sender (G42)

1) not relevant

Protected by copyright. Copying for private or commercial purposes, in part or in whole, is not permitted unless authorised by Volkswagen AG. Volkswagen AG does not guarantee or accept any liability with respect to the correctness of information in this document. Copyright by Volkswagen AG.
satelettronica

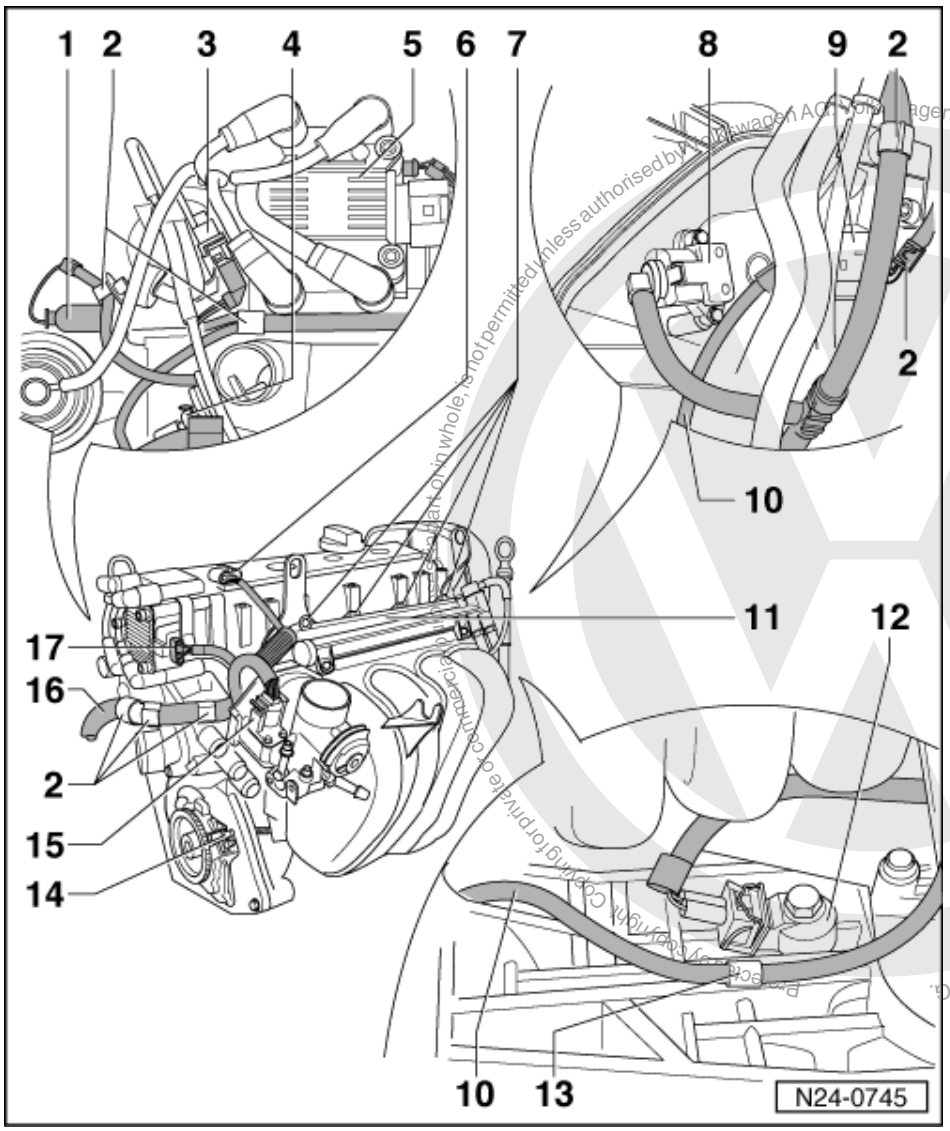

Volkswagen AG does not guarantee or accept any liability with respect to the correctness of information in this document. Copyright by Volkswagen AG.
Protected by copyright. Copying for private or commercial purposes, in part or in whole, is not permitted unless authorised by Volkswagen AG.
satelettronica

9 3 pin connector
- Grey for engine speed sender (G28)

10 Cable routing
- For engine speed sender (G28)

11 Cable guide
- Clipped onto fuel rail

12 Knock sensor 1 (G61)

13 Securing clip
- Secured to cylinder block

14 Engine speed sender (G28)

15 Throttle valve control part (J338)

16 Engine wiring harness

17 Connector
- Black, 4 pin
- For ignition transformer (N152)

3 - Checking functions

3.1 - Checking functions

3.2 - Checking Lambda probe and Lambda control

Special tools, workshop equipment, testers, measuring instruments and auxiliary items required

- Fault reader V.A.G 1551 or vehicle system tester V.A.G 1552 with cable V.A.G 1551/3
- Test box V.A.G 1598/22
- Hand multimeter V.A.G 1526 or multimeter V.A.G 1715
- Adapter set V.A.G 1594
- Current flow diagram

Check conditions

- The engine control unit must be matched to the throttle valve control part=> Page 98
- Coolant temperature at least 85 °C.
- Exhaust system between catalyst and cylinder head must be free of leaks

Functional check

- Connect fault reader V.A.G 1551 (V.A.G 1552). Start engine and select "Address word" 01 of engine control unit. When doing this the engine must be running at idling speed.
  (Connecting fault reader and selecting engine control unit => Page 2 .)

-> Indicated on display:

```
Rapid data transfer      HELP
Select function XX
```

- Press keys 0 and 8 for the function "Read measured value block" and confirm entry with Q key.

-> Indicated on display:

```
Read measured value block
Input display group number XXX
```

- Press keys 0 0 and 1 for "Display group number 1" and confirm entry with Q key.

-> Indicated on display:
(1...4 = Display zones)

```
Read measured value block      1
     1     2     3     4
```

Only continue with the test when

- The coolant temperature is above 85 °C
  -Display zone 2-
- The engine has then run for a further 2 minutes at idling speed

- Note Lambda probe voltage in display zone 3. The voltage must fluctuate
  at least 30 times per minute
  in range of
  0.000...0.900 V.
- Press ⇒key.
- Press keys 0 and 6 for the function "End output" and confirm entry with the Q key.

If the Lambda regulation does not fluctuate as stated:

Protected by copyright. Copyright by Volkswagen AG. Volkswagen AG does not guarantee or accept any liability with respect to the correctness of information in this document. Copyright by Volkswagen AG. Copyright by Volkswagen AG. Reproduction, in part or whole, is not permitted unless authorized by Volkswagen AG.
satelettronica

- Carry out road test and burn Lambda probes clean and repeat check.

If the specifications are not obtained again:

- Switch off ignition.
- Check the Lambda probe heating
  => Page 57 .

If the voltage change is slower, determine cause of fault. => Page 92 .

If the displayed figure remains constant:

- Continue check according to following table.

Display	Cause	Continuation of check
Between 0.040... 0.050 V	Open circuit	=> Page 93 Checking Lambda probe wiring
0.000 V	Short to earth	
1.170 V	Short to positive	

Possible causes of fault if probe control frequency is too slow:

- The slots or holes in probe body are blocked
- The probe vent hole in area of connecting wire is blocked
- The probe has been overheated (glazed)
- The probe has been damaged by leaded fuel

Checking basic voltage

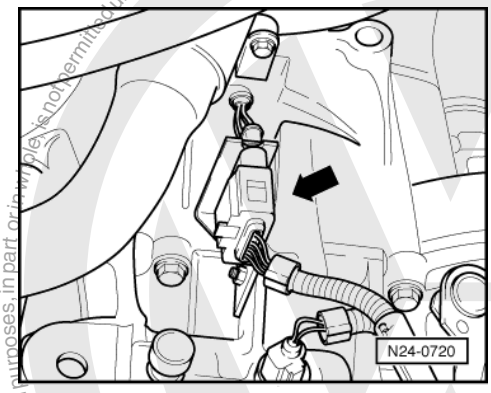

-> Separate 4 pin connector to Lambda probe (G39) -1-.

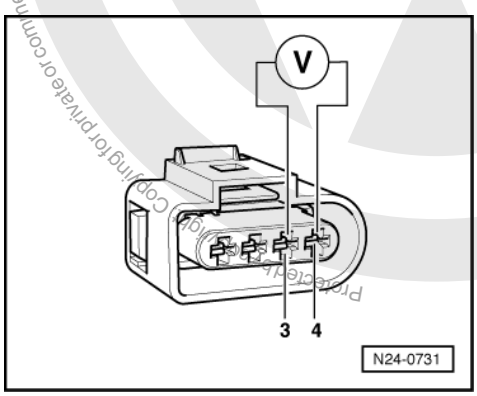

- -> Connect multimeter with aux. cables from V.A.G 1594 to measure voltage at contacts 3+4 (connector to engine control unit).
- Switch on ignition and measure basic voltage.
  Specification: 0.040...0.050 V

satelettronica

- Switch off ignition.

If the specification is not obtained:

- Check Lambda probe wiring
  => Page 93

If the specification is attained:

- Renew Lambda probe (G39)
  =>Page 40 , item 13 .

Checking Lambda probe wiring

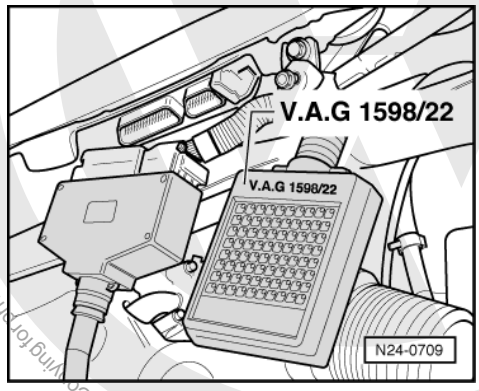

- Remove wiper arms and cowl panel:

=> Electrical system; Repair group 92; windscreen wiper system; removing and installing windscreen wiper system windscreen wiper system removing and installing windscreen wiper system

- -> Connect test box V.A.G 1598/22 to control unit wiring harness.

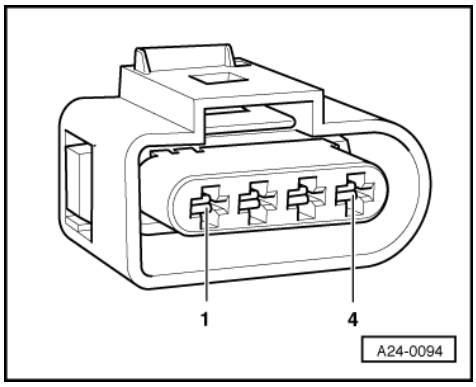

- -> Check wiring between test box and 4 pin connector (to control unit) for open circuit according to current flow diagram.
  Contact 3+socket 25
  Contact 4+socket 26
  Wire resistance: Max. 1.5 ω
- Check wiring at connector contacts 3+4 for short circuit to contacts 1+2 according to current flow diagram.
  Specification: ∞ω

If no wiring fault is detected:

- Renew Lambda probe (G39)
  =>Page 40 , item 13 .

Copyright by Volkswagen AG. Volkswagen AG does not guarantee or accept any liability with respect to the correctness of information in this document. Copying for private or commercial purposes, in part or in whole, is not permitted unless authorised by Volkswagen AG.
satelettronica

3.3 - Checking engine operating mode

Note:

Checks whether engine control unit recognises the engine operating modes idling, overrun, part throttle, enrichment, full throttle.

Special tools, workshop equipment, testers, measuring instruments and auxiliary items required

- Fault reader V.A.G 1551 or vehicle system tester V.A.G 1552 with cable V.A.G 1551/3

Check conditions

- Coolant temperature at least 85 °C.
- Throttle cable adjustment must be OK, checking:

=> Repair group 20; Throttle controls; Adjusting throttle cable Throttle controls Adjusting throttle cable

Test sequence

- Connect fault reader V.A.G 1551 (V.A.G 1552). Start engine and select "Address word" 01 of engine control unit. When doing this the engine must be running at idling speed.
  (Connecting fault reader and selecting engine control unit => Page 2 .)

-> Indicated on display:

```
Rapid data transfer     HELP
Select function XX
```

- Press keys 0 and 8 for the function "Read measured value block" and confirm entry with Q key.

-> Indicated on display:

```
Read measured value block     HELP
Input display group number XXX
```

- Press keys 0, 0 and 1 for "Display group number 1" and confirm entry with Q key.
- Check whether the coolant temperature is above 85 °C in display zone 2.
- Press C key.

-> Indicated on display:

```
Read measured value block     HELP
Input display group number XXX
```

- Press keys 0, 0 and 4 for "Display group number 4" and confirm entry with Q key.

-> Indicated on display:
(1...4 = Display zones)

```
Read measured value block     4
     1     2     3     4
```

- Observe -8 digit number block- in display zone 4 :
  (The right-hand 4 digits are of no consequence)

Display in operating mode

- Idling:

  With throttle valve closed 2nd position from left must display 1
  Display: 01000000

- Part throttle:

Protected by copyright. Copying for private or commercial purposes, in part or in whole, is not permitted unless authorised by Volkswagen AG. Volkswagen AG does not guarantee or accept any liability with respect to the correctness of information in this document. Copyright by Volkswagen AG.
satelettronica

- Rev up evenly.

  3rd position from left must display 1
  Display:: 00100000

◆ Full throttle:

- Briefly open throttle fully (throttle burst).

  4th position from left must briefly display 1
  Display: 00010000

Note:

A test drive may have to be performed to show "Full throttle" in display.

A 2nd person is required when performing a test drive.

Warning! Secure fault reader to rear seat and operate from this position.

Observe the valid safety measures during a test drive => Page 55 .

◆ Overrun mode:

- Increase engine speed to above 3000 rpm.
- Close throttle valve abruptly.

  As long as the engine speed is above 1400 rpm 1st position from left must display 1
  Display: 11000000 (briefly)

Note:

Below 1400 rpm idling speed is again recognised.

- Press ⇒key.
- Press keys 0 and 6 for the function "End output" and confirm entry with the Q key.
- Switch off ignition.

If the specifications are not attained:

- Interrogate fault memory, if necessary, repair any faults and then erase fault memory => Page 7 , interrogating and erasing fault memory.
- Check accelerator mechanism for ease of operation.
- Check throttle valve potentiometer
  => Page 59 , Checking throttle valve control part.

4 - Engine control unit

4.1 - Engine control unit

4.2 - Checking control unit voltage supply

Special tools, workshop equipment, testers, measuring instruments and auxiliary items required

◆ Fault reader V.A.G 1551 or vehicle system tester V.A.G 1552 with cable V.A.G 1551/3
◆ Test box V.A.G 1598/22
◆ Hand multimeter V.A.G 1526 or multimeter V.A.G 1715

Protected by copyright. Copyright by Volkswagen AG. Volkswagen AG does not guarantee or accept any liability with respect to the correctness of information in this document. Copyright by Volkswagen AG. Reproduction, in part or in whole, not permitted unless authorised by Volkswagen AG.
satelettronica

- Adapter set V.A.G 1594
- Current flow diagram

Check conditions

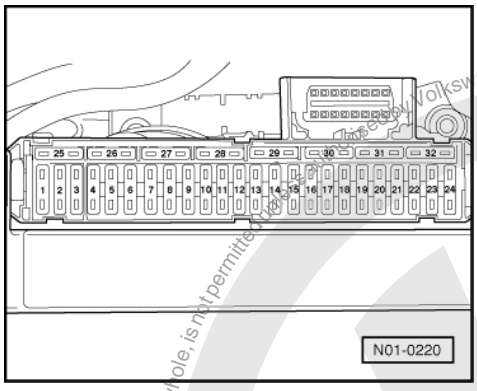

- -> Fuses 1, 2, 9,10 and 32 must be OK.
- Earth connection in plenum chamber OK.
- The battery voltage must be at least 11.5 V.
- If the vehicle is equipped with an air conditioner, this must be switched off.
- All electrical consumers, e.g. lights and rear window heating must be switched off.
- On vehicles with automatic gearbox the selector lever must be in "P" or "N" position.
- Alternator OK, checking:

=> Current flow diagrams, Electrical fault finding and Fitting locations

Test sequence

- Connect fault reader V.A.G 1551 (V.A.G 1552). Start engine and select "Address word" 01 of engine control unit. When doing this the engine must be running at idling speed.
  (Connecting fault reader and selecting engine control unit => Page 2 .)

-> Indicated on display:

```
Rapid data transfer      HELP
Select function XX
```

- Press keys 0 and 8 for the function "Read measured value block" and confirm entry with Q key.

-> Indicated on display:

```
Read measured value block     HELP
Input display group number XXX
```

- Press keys 0, 0 and 2 for "Display group number 2" and confirm entry with Q key.

-> Indicated on display:
(1...4 = Display zones)

```
Read measured value block 2
     1     2     3     4
```

- Read off figure displayed in display zone 3.
  Specification: At least 11.5 V
- Press the ⇒key.
- Press keys 0 and 6 for the "End output" function and confirm input with the Q key.
- Switch off ignition.

If the specification is not attained:

- Remove the wiper arms and the cowl panel:

Protected by copyright. Copying for private or commercial purposes, in whole or in part, is not permitted unless authorised by Volkswagen AG. Volkswagen AG does not guarantee or accept any liability with respect to the correctness of information in this document. Copyright by Volkswagen AG.
satelettronica

=> Electrical system; Repair group 92; Windscreen wiper system; Removing and installing windscreen wiper system Windscreen wiper system Removing and installing windscreen wiper system

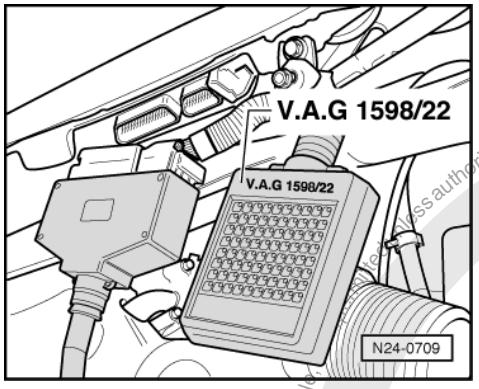

- -> Connect test box V.A.G 1598/22 to control unit wiring harness.

Checking voltage supply terminal 30

- Measure supply voltage between test box sockets 1+2 using multimeter and adapter cables from V.A.G 1594:
  Specification: at least 11.5 V

If the specification is not attained:

- Check wiring connections to relay plate according to current flow diagram.

=> Current flow diagrams, Electrical fault finding and Fitting locations

Checking voltage supply terminal 15

- Measure supply voltage between test box sockets 2+3 using multimeter and adapter cables from V.A.G 1594.
- Switch on ignition.
  Specification: min. 11.5 V

If the specification is not attained:

- Check wiring connections to relay plate according to current flow diagram.

=> Current flow diagrams, Electrical fault finding and Fitting locations

4.3 - Replacing engine control unit

The engine control unit regulates the injection, throttle valve control part, Lambda control, ignition, knock control, activated charcoal filter solenoid valve 1, engine speed governor via injectors or fuel pump relay as well as self-diagnosis.

Special tools, workshop equipment, testers, measuring instruments and auxiliary items required

◆ Fault reader V.A.G 1551 with cable V.A.G 1551/3

Work sequence

- First print out the control unit identification and thereby the previous control unit coding as follows:
- Connect the fault reader V.A.G 1551 (V.A.G 1552). Then switch ignition on and select engine control unit with the "Address word" 01.
  (Connecting fault reader and selecting engine control unit => Page 2 .)

-> The control unit identification and the coding will appear on the display, e.g.:

Protected by copyright. Copyright by Volkswagen AG.
Copyright by Volkswagen AG. Volkswagen AG does not guarantee or accept any liability with respect to the correctness of information in this document.
Copying for private or commercial purposes, in part or in whole, is not permitted unless authorised by Volkswagen AG.
satelettronica

```
036 906 041M      MARELLI 4AV      2271
Coding 00000      WSC XXXXX
```

- Print out the control unit identification by pressing the fault reader print button.
- Press the ⇒key.
- Press keys 0 and 6 for the function "End output" and confirm entry with the Q key.

-> Indicated on display:

```
Rapid data transfer      HELP
Select function XX
```

- Switch off ignition.
- Remove wiper arms and cowl panel:

=> Electrical system; Repair group 92; windscreen wiper system; removing and installing windscreen wiper system windscreen wiper system removing and installing windscreen wiper system

- Release connector from control unit and pull off.

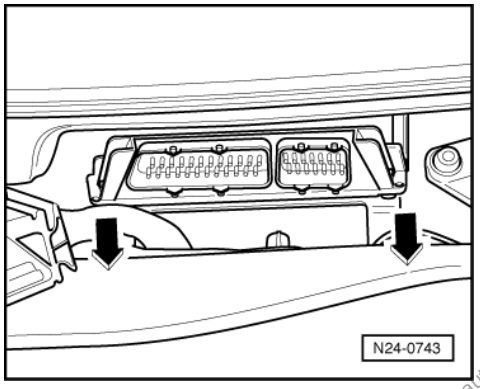

- -> Pull the control unit out of the retaining frame -arrows-.
- Place the new control unit into the retaining frame.
- Install control unit connector and lock.
- Match new control unit to throttle valve control part => Page 98
- Match new control unit to the electronic immobilizer => Page 100
- Then subsequently interrogate the fault memory of the new engine control unit and erase the fault memory if necessary => Page 7 , interrogating and erasing fault memory.

4.4 - Matching engine control unit to throttle valve control part

When matching with ignition switched on but engine not running the engine control unit learns the throttle valve control part limit positions and a comparison curve between throttle valve potentiometer and throttle valve positioner.

Matching sequence must be performed if:

- The voltage supply is interrupted
- The throttle valve control unit is removed and installed
- The throttle valve control unit is renewed
- The engine control unit is replaced
- If when installing another engine another throttle valve control unit is installed

Special tools, workshop equipment, testers, measuring instruments and auxiliary items required

- Fault reader V.A.G 1551 or vehicle system tester V.A.G 1552 with cable V.A.G 1551/3

Test conditions

- No faults must be stored in fault memory => Page 7 , interrogating and erasing fault memory.
- The battery voltage must be at least 11.5 V.

Protected by copyright. Copyright by Volkswagen AG. Reproduction, in whole or in part, for commercial purposes, in any form or by any means, authorised by Volkswagen AG. Volkswagen AG does not guarantee or accept any liability with respect to the correctness of information in this document.
satelettronica

- All electrical consumers, e.g. lights and rear window heating must be switched off.
- The throttle valve must be at idling speed position.
- The cruise control system must be functioning correctly if installed.
- Throttle cable adjustment must be OK, checking:

=> Repair group 20; Throttle controls; Adjusting throttle cable Throttle controls Adjusting throttle cable

Work sequence

- Connect the fault reader V.A.G 1551 (V.A.G 1552). Then switch ignition on and select engine control unit with the "Address word" 01.
  (Connecting fault reader and selecting engine control unit => Page 2 .)

-> Indicated on display:

```
Rapid data transfer      HELP
Select function XX
```

- Press keys 0 and 4 for the function "Introduction of basic setting" and confirm entry with Q key.

-> Indicated on display:

```
Basic setting
Input display group number XXX
```

- Press keys 0, 9 and 8 for "Display group number 98" and confirm entry with Q key.

-> Indicated on display:

```
System in basic setting      98
     x.xxx V     x.xxx V     Idling ADP.
runs
```

After pressing the Q-key the throttle valve positioner is driven to Min., Max. and five intermediate positions and the relevant throttle valve angle stored in non-volatile memory. This procedure takes approx. 10 seconds. The throttle valve then remains in the start position for a brief period then closes.

-> Indicated on display:

```
System in basic setting      98
     x.xxx V     x.xxx V     Idling ADP.
OK.
```

Matching has been performed successfully.

To store the values:

- Switch off ignition.

Note:

If the basic setting of the control unit is interrupted, the cause could be one of the following:

- Throttle valve cannot reach the mechanical stop because of contamination e.g. oil deposits or an incorrectly adjusted throttle cable.
- Battery voltage too low.
- Throttle valve control unit or wiring is defective. Checking => Page 59 .

After an interruption the possible faults are stored in fault memory. When next switching on ignition the basic setting is automatically performed again.

- End the engine basic setting by pressing the⇨ key.
- Check specifications of throttle valve control part in display group 5 (display zone 4), => Page 25 , evaluating measured value blocks. If the specifications are not obtained, repeat matching.
- Press keys 0 and 6 for the function "End output" and confirm entry with the Q key.

satelettronica

4.5 - Matching engine control unit to electronic immobilizer

Special tools, workshop equipment, testers, measuring instruments and auxiliary items required

- Fault reader V.A.G 1551 or vehicle system tester V.A.G 1552 with cable V.A.G 1551/3

Conditions

- Authorized vehicle key required.

Work sequence

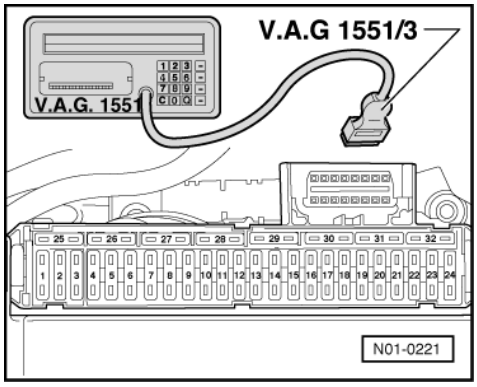

- -> Pull off cover in left stowage compartment below the steering wheel.
- Connect fault reader V.A.G 1551 or vehicle system tester V.A.G 1552 with cable V.A.G 1551/3.
- Switch on ignition.
- Operate fault reader or vehicle system tester taking into account the information on the display:
- Press key 1 for "Rapid data transfer".
- Press keys 1 and 7 for address word "dash panel insert" and confirm entry with Q key.

-> Indicated on display:

```
1J0 919 890 A4 Combi-instr. VDO V05
Coding 00141     WSC XXXXX
```

- Press the ⇒key.

-> Indicated on display:

```
IMMO-IDENT NO: VWZ7Z0V0071094
```

- Press the ⇒key.

-> Indicated on display:

```
Rapid data transfer     HELP
Select function XX
```

- Press keys 1 and 0 for function "Adaption" and confirm entry with Q key.

-> Indicated on display:

```
Adaption
Feed in channel number XX
```

- Press key 0 twice for "Channel number 0" and confirm entry with Q key.

-> Indicated on display:

```
Adaption     Q
Erase learnt values?
```

- Confirm input with Q key.

Protected by copyright. Copying for private or commercial purposes, in part or in whole, is not permitted unless authorised by Volkswagen AG. Volkswagen AG does not guarantee or accept any liability with respect to the correctness of information in this document. Copyright by Volkswagen AG.
satelettronica

-> Indicated on display:

```
Adaption
Learnt values have been erased
```

- Conclude adaption by pressing ⇒ key.
- Press keys 0 and 6 for the function "End output" and confirm entry with the Q key.
- Switch off ignition.

Note:

The identity of the engine control unit is read into the immobilizer control unit when next switching the ignition on.

5 - Checking additional signals

5.1 - Checking additional signals

5.2 - Checking speed signal

Special tools, workshop equipment, testers, measuring instruments and auxiliary items required

- Fault reader V.A.G 1551 or vehicle system tester V.A.G 1552 with cable V.A.G 1551/3
- Test box V.A.G 1598/22
- Hand multimeter V.A.G 1526 or multimeter V.A.G 1715
- Adapter set V.A.G 1594
- Current flow diagram

Check conditions

- The battery voltage must be at least 11.5 V.
- No faults must be stored in fault memory => Page 7 , interrogating and erasing fault memory.
- Speedometer must be OK., checking speedometer:

=> Electrical system; Repair group 90

Test sequence

Note:

To check the speed signal the vehicle must be driven. To do this a second person is necessary.

Warning! Secure fault reader to rear seat and operate from this position.

Observe the valid safety precautions when carrying out a road test => Page 55 .

- Connect fault reader V.A.G 1551 (V.A.G 1552). Start engine and select "Address word" 01 of engine control unit. When doing this the engine must be running at idling speed.
  (Connecting fault reader and selecting engine control unit => Page 2 .)

-> Indicated on display:

```
Rapid data transfer      HELP
Select function XX
```

- Press keys 0 and 8 for the function "Read measured value block" and confirm entry with Q key.

-> Indicated on display:

Protected by copyright. Copying for private or commercial purposes, in part or in whole, is not permitted unless authorised by Volkswagen AG. Volkswagen AG does not guarantee or accept any liability with respect to the correctness of information in this document. Copyright by Volkswagen AG.
satelettronica

```
Read measured value block     HELP
Input display group number XXX
```

- Press keys 0, 0 and 4 for "Display group number 4" and confirm entry with Q key.

-> Indicated on display:
(1...4 = Display zones)

```
Read measured value block 4
     1     2     3     4
```

- Carry out test drive with a 2nd person to observe display.
- Observe figure displayed in display zone 3:
  Specification: approx. driven speed
- Drive slower. The displayed value must
  decrease.
- Press the ⇒key.
- Press keys 0 and 6 for the "End output" function and confirm input with the Q key.
- Switch off ignition.

If no speed is indicated or the display values reduce when driving slowly:

- Remove wiper arms and cowl panel:

=> Electrical system; Repair group 92; windscreen wiper system; removing and installing windscreen wiper system windscreen wiper system removing and installing windscreen wiper system

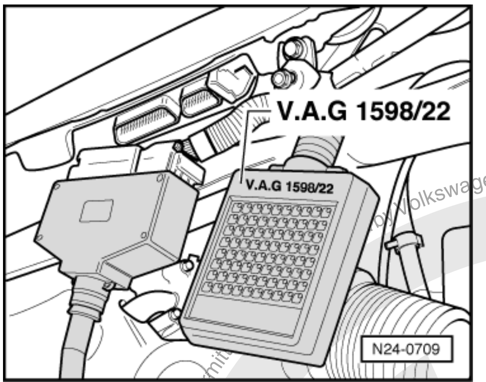

- -> Connect test box V.A.G 1598/22 to control unit wiring harness.
- Connect multimeter to measure voltage between test box sockets 2+20.
- Switch on ignition.
- Lift vehicle at front left.
- Rotate front wheel and observe voltage display.
  Specification: between 0 and at least 4 Volt fluctuating

If the display does not fluctuate:

- Check wiring to speedometer/speedometer sender:

=> Current flow diagrams, Electrical fault finding and Fitting locations

5.3 - Checking signal from/to air conditioning system

Air conditioner compressor signal:
Voltage is supplied to the engine control unit shortly before switching on the air conditioner compressor. The signal ensures that the control unit keeps the idling speed constant for the differing power requirements of the air conditioning system.

Air conditioner cut-off:

Protected by copyright. Copying for private or commercial purposes, in part or in whole, is not permitted unless authorised by Volkswagen AG. Volkswagen AG does not guarantee or accept any liability with respect to the correctness of information in this document. Copyright by Volkswagen AG.

satelettronica

The air conditioner compressor is switched off for approx. 6 seconds by the engine control unit when accelerating from standstill and from low speeds (1st gear) to ensure that the full engine power is available when accelerating. If the accelerator is released earlier the time is shortened to a minimum of 3 seconds. At full throttle the air conditioner compressor is switched off by the gearbox control unit (Kick-down switch).

Special tools, workshop equipment, testers, measuring instruments and auxiliary items required

- Fault reader V.A.G 1551 or vehicle system tester V.A.G 1552 with cable V.A.G 1551/3
- Test box V.A.G 1598/22
- Hand multimeter V.A.G 1526 or multimeter V.A.G 1715
- Adapter set V.A.G 1594
- Current flow diagram

Test conditions

- Air conditioner functioning OK.
- Air conditioner must be switched off
- All electrical consumers, e.g. lights and rear window heating must be switched off.
- Vehicle at room temperature (warmer than + 15 °C).
- No faults must be stored in fault memory => Page 7 , interrogating and erasing fault memory.

Test sequence

- Connect fault reader V.A.G 1551 (V.A.G 1552). Start engine and select "Address word" 01 of engine control unit. When doing this the engine must be running at idling speed.
  (Connecting fault reader and selecting engine control unit => Page 2 .)

-> Indicated on display:

```
Rapid data transfer      HELP
Select function XX
```

- Press keys 0 and 8 for the function "Read measured value block" and confirm entry with Q key.

-> Indicated on display:

```
Read measured value block      HELP
Input display group number XXX
```

- Press keys 0, 0 and 1 for "Display group number 1" and confirm entry with Q key.

-> Indicated on display:
(1...4 = Display zones)

```
Read measured value block      1
     1     2     3     4
```

- Observe -8 digit number block- in display zone 4 :

  3rd position from left must display 0
  Display:: 00000000

- Switch on air conditioning system.
- Select lowest temperature and highest blower speed.

  3rd position from left must display 1
  Display: 10100000

- Floor accelerator pedal quickly and release again (short throttle burst).

When the accelerator pedal is depressed quickly the 3rd position from left in display zone 4 must display a "0" for a few seconds (compressor switch-off when vehicle is accelerating).

- Press the ⇒key.
- Press keys 0 and 6 for the "End output" function and confirm input with the Q key.
- Switch off ignition.

satelettronica

If the display does not indicate as described:

- Remove wiper arms and cowl panel:

=> Electrical system; Repair group 92; windscreen wiper system; removing and installing windscreen wiper system windscreen wiper system removing and installing windscreen wiper system

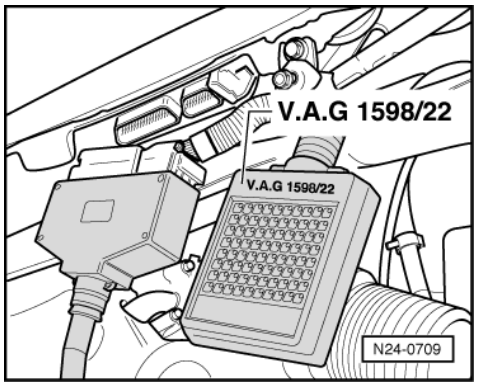

- -> Connect test box V.A.G 1598/22 to control unit wiring harness.
- Check wiring between test box sockets 8 + 10 and air conditioner for open circuit using current flow diagram.
  Wire resistance: Max. 1.5 ω.

If no fault can be found in the wiring:

- Check function of air conditioner operating unit:

=> Heating, air conditioning; Repair group 01; Climatronic self-diagnosis; Interrogating fault memory 02 Climatronic self-diagnosis Interrogating fault memory 02

5.4 - Checking driving range signal

Engine control unit receives information from gearbox control unit:
Driving range selected (selector lever in 1/2/3/R/D)
or
No driving range selected (selector lever in P or N)

Special tools, workshop equipment, testers, measuring instruments and auxiliary items required

- Test box V.A.G 1598/22
- Adapter set V.A.G 1594
- Diode test lamp V.A.G 1527
- Current flow diagram

Check conditions

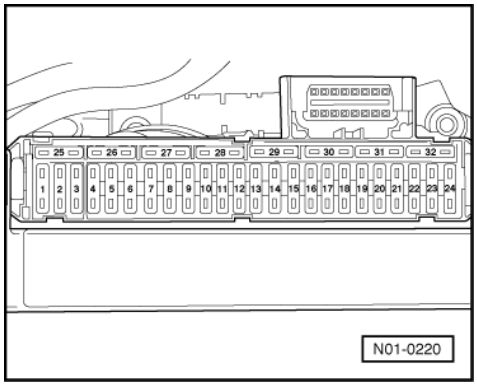

Protected by copyright. Copying for private or commercial purposes, in part or in whole, is not permitted unless authorised by Volkswagen AG. Volkswagen AG does not guarantee or accept any liability with respect to the correctness of information in this document. Copyright by Volkswagen AG.
satelettronica

- -> Fuses 1, 2, 9 and 10 must be OK.
- The battery voltage must be at least 11.5 V.
- All electrical consumers, e.g. lights and rear window heating must be switched off.
- On vehicles with automatic gearbox the selector lever must be in "P" or "N" position.
- No faults must be stored in fault memory => Page 7 , interrogating and erasing fault memory.

Test sequence

- Remove wiper arms and cowl panel:

=> Electrical system; Repair group 92; windscreen wiper system; removing and installing windscreen wiper system windscreen wiper system removing and installing windscreen wiper system

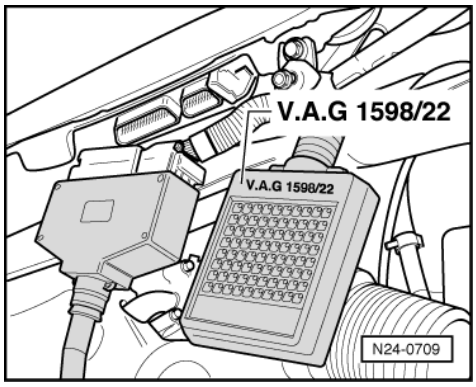

- -> Connect test box V.A.G 1598/22 to control unit wiring harness.
- Connect diode test lamp between socket 1 (terminal 30) and socket 22.
- Switch on ignition.
- The diode test lamp should go out when a gear is engaged.
- Switch off ignition.
- If the diode test lamp is permanently lit or does not light up at all, check the wiring from contact 22 on engine control unit to automatic gearbox for short to positive and to earth as well as for open circuit:

=> Current flow diagrams, Electrical fault finding and Fitting locations

5.5 - Checking rpm signal

Note:

The engine speed signal is output on contact 6 of engine control unit, the signal is necessary amongst other things for the automatic gearbox control unit to calculate the shift points and for the rev. counter in dash panel insert.

Special tools, workshop equipment, testers, measuring instruments and auxiliary items required

- Test box V.A.G 1598/22
- Adapter set V.A.G 1594
- Hand multimeter V.A.G 1526 or multimeter V.A.G 1715
- Current flow diagram

Test conditions

- No faults must be stored in fault memory => Page 7 , interrogating and erasing fault memory.

Protected by copyright. Copying for private or commercial purposes, in part or in whole, is not permitted unless authorised by Volkswagen AG. Volkswagen AG does not guarantee or accept any liability with respect to the correctness of information in this document. Copyright by Volkswagen AG.
satelettronica

Test sequence

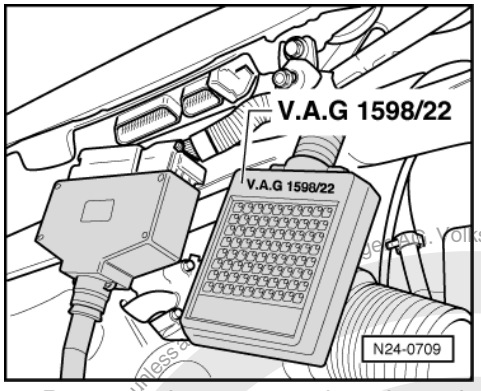

- Remove wiper arms and cowl panel:

=> Electrical system; Repair group 92; windscreen wiper system; removing and installing windscreen wiper system windscreen wiper system removing and installing windscreen wiper system

- ➢ Connect test box V.A.G 1598/22 to control unit wiring harness.
- Check the wiring from test box contact 6 to dash panel insert for open circuit using current flow diagram:

=> Current flow diagrams, Electrical fault finding and Fitting locations

5.6 - Checking gearbox intervention signal when a gear is shifted

Notes:

- This signal is produced by the automatic gearbox control unit during a gearshift. The signal enables the ignition timing to be briefly retarded by varying amounts (torque reduction) depending on the road speed and engine speed. This smooths out the slight jerk as the gear engages.
- The signal is a square wave signal which is fed to contact 23 on the engine control unit.
- Because the signal is very brief the V.A.G. 1551 does not always recognise the command to retard the ignition timing.

Special tools, workshop equipment, testers, measuring instruments and auxiliary items required

- Fault reader V.A.G 1551 or vehicle system tester V.A.G 1552 with cable V.A.G 1551/3
- Test box V.A.G 1598/22
- Adapter set V.A.G 1594
- Hand multimeter V.A.G 1526 or multimeter V.A.G 1715
- Current flow diagram

Test conditions

- No faults must be stored in fault memory => Page 7 , interrogating and erasing fault memory.

Test sequence

Note:

To check the gearbox intervention signal the vehicle must be driven. To do this a second person is necessary.

Warning! Secure fault reader to rear seat and operate from this position.

Observe the valid safety precautions when carrying out a road test => Page 55 .

Copyright by Volkswagen AG. Volkswagen AG does not guarantee or accept any liability with respect to the correctness of information in this document. Copyright by Volkswagen AG. Protected by copyright. Copying for private or commercial purposes, in part or in whole, is not permitted unless authorised by Volkswagen AG.
satelettronica

- Connect fault reader V.A.G 1551 (V.A.G 1552). Start engine and select "Address word" 01 of engine control unit. When doing this the engine must be running at idling speed.
  (Connecting fault reader and selecting engine control unit => Page 2 .)

-> Indicated on display:

```
Rapid data transfer      HELP
Select function XX
```

- Press keys 0 and 8 for the function "Read measured value block" and confirm entry with Q key.

-> Indicated on display:

```
Read measured value block      HELP
Input display group number XXX
```

- Press keys 0, 0 and 1 for "Display group number 1" and confirm entry with Q key.

-> Indicated on display:
(1...4 = Display zones)

```
Read measured value block      1
     1     2     3     4
```

- Carry out test drive with a 2nd person to observe display.
- Observe -8 digit number block- in display zone 4 :

  2nd position from left displays 0
  Display: 00000000 = No gearbox intervention
  2nd position from left displays 1
  Display: 01000000 = Gearbox intervention

Note:

When the gearbox control unit gives the command for the ignition timing to be retarded the readout will change briefly from "0" to "1".

- Press the ⇒key.
- Press keys 0 and 6 for the "End output" function and confirm input with the Q key.
- Switch off ignition.

If the torque reduction is not displayed in measured value block during a gear shift or the fault code 00545 (in automatic gearbox control unit) is displayed:

- Remove wiper arms and cowl panel:

=> Electrical system; Repair group 92; windscreen wiper system; removing and installing windscreen wiper system windscreen wiper system removing and installing windscreen wiper system

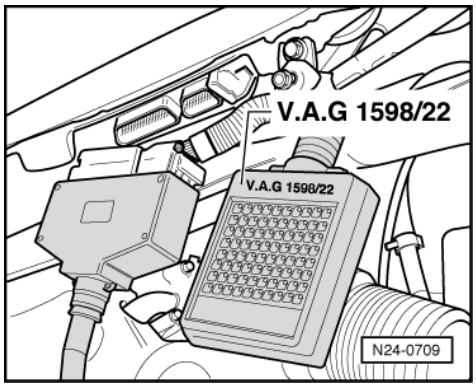

- -> Connect test box V.A.G 1598/22 to control unit wiring harness.
- Check the wiring from contact 23 on engine control unit to automatic gearbox control unit for open/short circuit:

Protected by copyright. Copying for private or commercial purposes, in part or in whole, is not permitted unless authorised by Volkswagen AG. Volkswagen AG does not guarantee or accept any liability with respect to the correctness of information in this document. Copyright by Volkswagen AG.
satelettronica

=> Current flow diagrams, Electrical fault finding and Fitting locations

Protected by copyright. Copying for private or commercial purposes, in part or in whole, is not permitted unless authorised by Volkswagen AG. Volkswagen AG does not guarantee or accept any liability with respect to the correctness of information in this document. Copyright by Volkswagen AG.
satelettronica

28 - Ignition system

Protected by copyright. Copyright by Volkswagen AG. Volkswagen AG does not guarantee or accept any liability with respect to the correctness of information in this document. Copyright by Volkswagen AG, unless authorised by Volkswagen AG. Volkswagen AG does not guarantee or accept any liability with respect to the correctness of information in this document. Copyright by Volkswagen AG.

1 - Servicing ignition system

1.1 - Servicing ignition system

1.2 - General notes on ignition system

- Only the components which specifically relate to the ignition system are dealt with here. For the other components of the injection and ignition system => Repair group 24.
- Disconnecting and connecting the battery must only be done with the ignition switched off, otherwise the engine control unit could be damaged.
- The engine control unit is equipped with self diagnosis.
- Components marked with * are checked via the self diagnosis => Page 7 , interrogating and erasing fault memory.
- For trouble-free operation of the electrical components a voltage of at least 11.5 V is necessary.
- Before carrying out repairs and for fault finding, interrogate fault memory => Page 7 , interrogating and erasing fault memory
- During some checks it is possible that the control unit will recognise and store a fault. Therefore after completing all checks and repairs the fault memory must be interrogated and if necessary erased. => Page 7 , interrogating and erasing fault memory

- If the engine starts, runs for a short period and then stops, after fault finding, repairs or component tests, then the fault may lie with the immobilizer which is blocking the engine control unit. The fault memory must be interrogated and if necessary the control unit matched => Page 100 .

Safety precautions => Page 112

Test data, spark plugs => Page 113

satelettronica

1.3 - Removing and installing parts of the ignition system

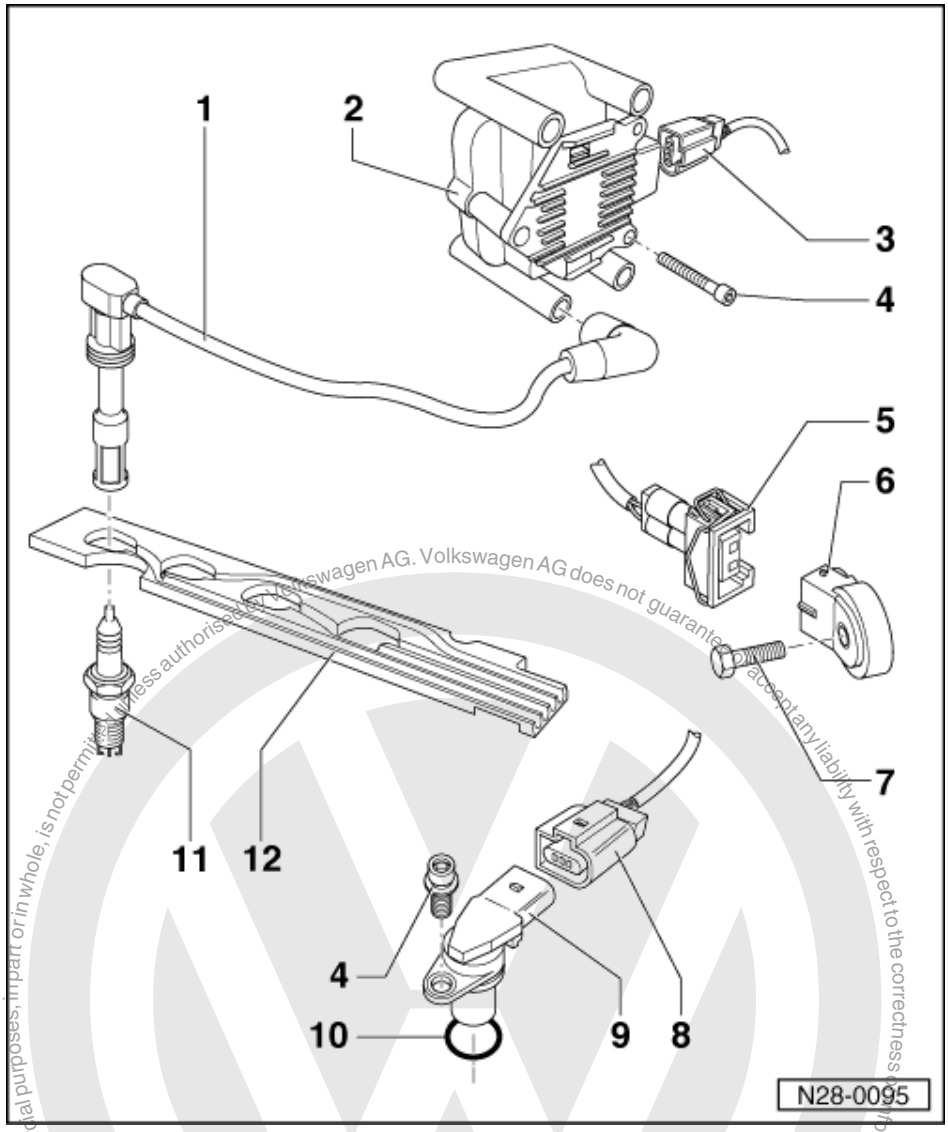

Note:

4AV control unit (J448) with connectors => Page 43 , item 25 .*

1 H.T. cable
- With suppression connector and spark plug connector
- Resistance 4.8...7.2 kω
- Check for continuity

2 Ignition transformer (N152)
- Marked for H.T. cables:
  A = Cylinder 1
  B = Cylinder 2
  C = Cylinder 3
  D = Cylinder 4
- Checking => Page 115
- Fitting location => Page 34 , engine compartment overview

satelettronica

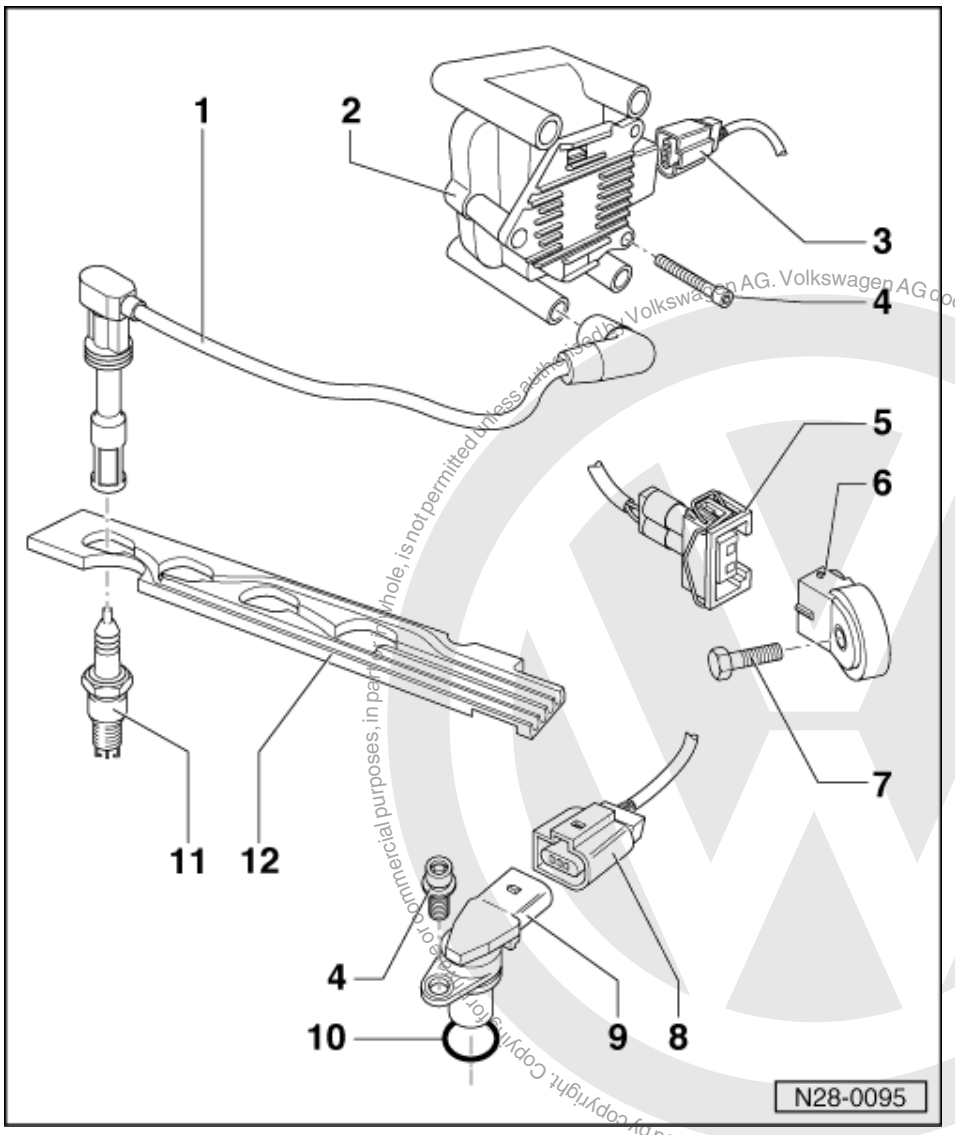

3 Connector
- Black, 4 pin
- For ignition transformer (N152)

4 10 Nm

5 Connector
- Black, 2-pin
- For knock sensor 1 (G61)
- Sensor and connector contacts are gold-plated

6 Knock sensor 1 (G61)*
- Sensor and connector contacts are gold-plated
- Checking => Page 119
- Fitting location => Page 34 , engine compartment overview

7 20 Nm
- Tightening torque influences the function of the knock sensor

Protected by copyright. Copyright by Volkswagen AG.
Volkswagen AG does not guarantee or accept any liability with respect to the correctness of information in this document. Copyright by Volkswagen AG.
satelettronica

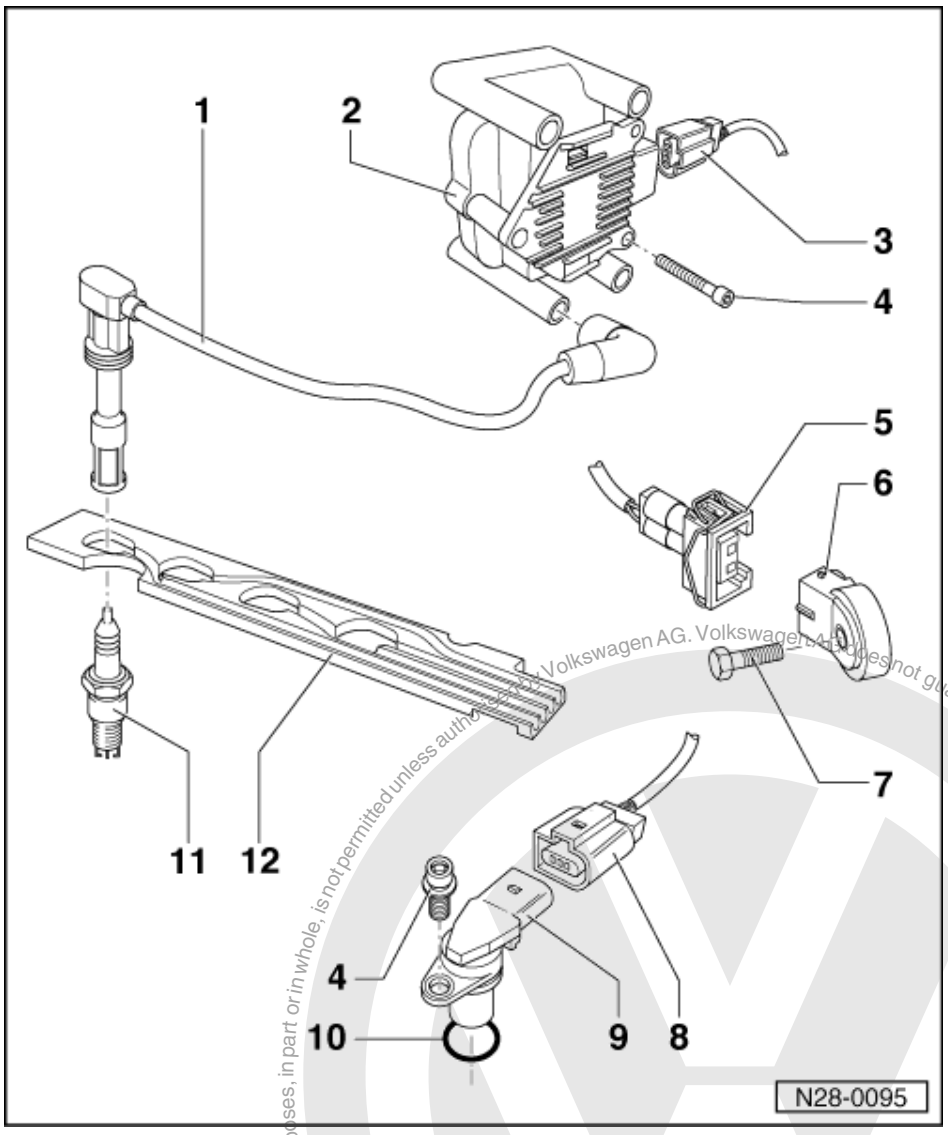

8 Connector
- Black, 3 pin
- Hall sender (G40)

9 Hall sender (G40)*
- Checking => Page 114
- Fitting location => Page 34 , engine compartment overview

10 O ring
- Renew if damaged

11 Spark plug, 30 Nm
- Remove and install with spark plug spanner 3122B
- Type and electrode gap
  => Page 113 , test data, spark plugs

12 H.T. cable guide

1.4 - Safety precautions

To prevent injuries to persons and/or damage to the fuel injection and ignition system, the following must be noted:

Protected by copyright. Copying for private or commercial purposes, in part or in whole, is not permitted unless authorised by Volkswagen AG. Volkswagen AG does not guarantee or accept any liability with respect to the correctness of information in this document. Copyright by Volkswagen AG.
satelettronica

- Do not touch or disconnect ignition wiring when the engine is running or being turned at starter speed.
- The ignition must be switched off before connecting or disconnecting injection or ignition system wiring or tester cables.

Observe following if test and measuring instruments are required during a test drive:

- Test and measuring instruments must be secured to rear seat and operated by a 2nd person from this location.

  If test and measuring instruments are operated from front passenger's seat and the vehicle is involved in an accident, there is a possibility that the person sitting in this seat may receive serious injuries when the airbag is triggered.

- If the engine is to be turned at starter speed, without starting:

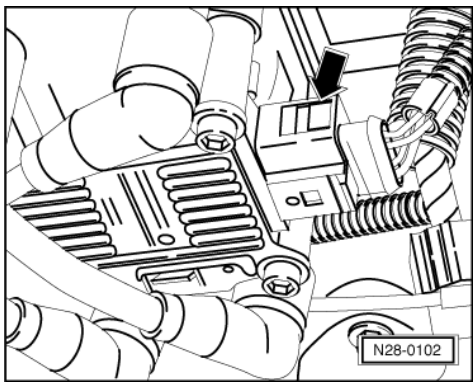

- -> Pull 4 pin connector off ignition transformer -arrow-.

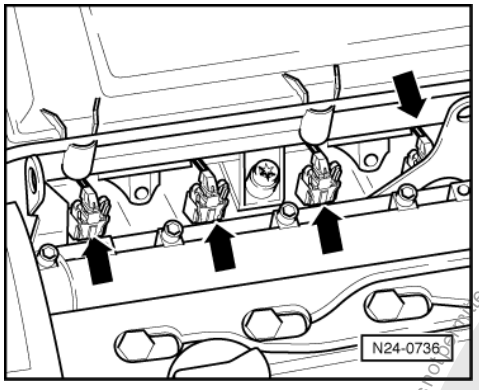

- -> Pull plug -arrows- off all injectors.

1.5 - Test data, spark plugs

Engine code	AJV
Firing order	1-3-4-2
Spark plugs1)	
VW/Audi	101 000 033 AA
Manufacturer's designation	NGK BKUR 6 ET-10
Electrode gap	0.9...1.1 mm
Tightening torque	30 Nm

1) The up-to-date figures and the spark plug change intervals:

=> Exhaust emissions test binder

Protected by copyright. Copying for private or commercial purposes, in part or in whole, is not permitted unless authorised by Volkswagen AG. Volkswagen AG does not guarantee or accept any liability with respect to the correctness of information in this document. Copyright by Volkswagen AG.
satelettronica

1.6 - Checking Hall sender

Special tools, workshop equipment, testers, measuring instruments and auxiliary items required

- Test box V.A.G 1598/22
- Hand multimeter V.A.G 1526 or multimeter V.A.G 1715
- Adapter set V.A.G 1594
- Current flow diagram

Test conditions

- The battery voltage must be at least 11.5 V.

Test sequence

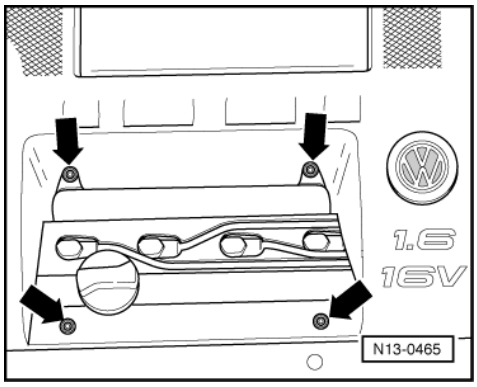

- -> Remove cover above camshaft housing -arrows-.

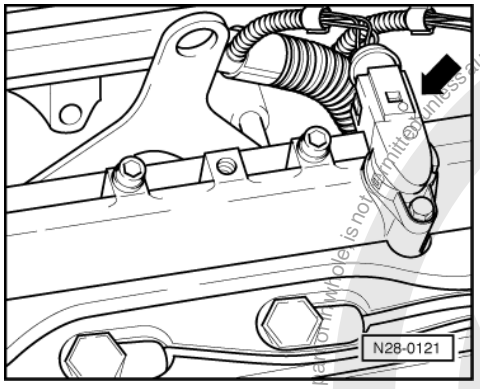

- -> Pull 3 pin connector off Hall sender -arrow-.

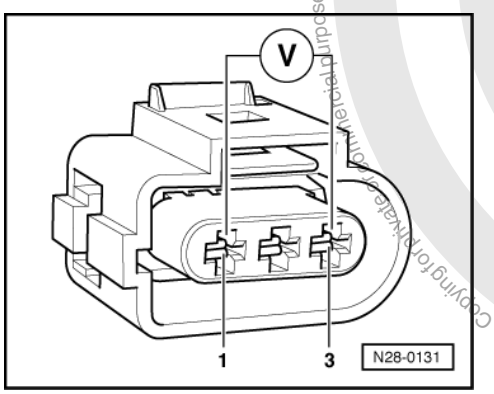

- -> Connect multimeter to measure voltage with adapter cables from V.A.G 1594 to contacts 1 (positive) and 3 (earth) on the Hall sender connector.
- Switch on ignition.
  Specification: min. 4.5 V

satelettronica
Copyright by Volkswagen AG. Volkswagen AG does not guarantee or accept any liability with respect to the correctness of information in this document. Copying for private or commercial purposes, in whole or in part, is not permitted unless authorised by Volkswagen AG.
Protected by copyright.

- Switch off ignition.

If no voltage is present:

- Remove wiper arms and cowl panel:

=> Electrical system; Repair group 92; windscreen wiper system; removing and installing windscreen wiper system windscreen wiper system removing and installing windscreen wiper system

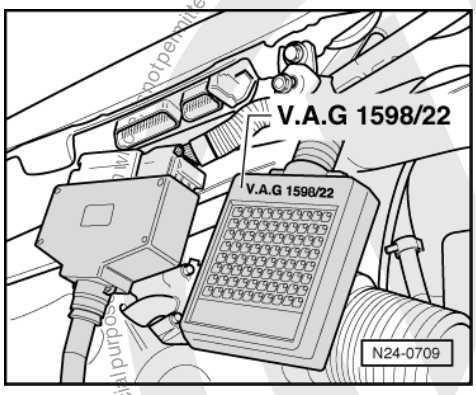

- -> Connect test box V.A.G 1598/22 to control unit wiring harness.

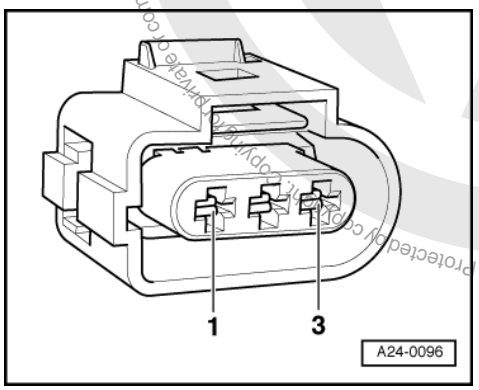

- -> Check wiring between test box and 3 pin connector for open circuit using current flow diagram.
  Contact 1+socket 64
  Contact 2+socket 76
  Contact 3+socket 67
  Wire resistance: Max. 1.5 ω
- Additionally check wires for short to one another.
  Specification: ∞ω

If no wiring fault is detected and voltage was present between contacts 1+3:

- Renew Hall sender (G40)
  => Page 112 , item 9 .

If no wiring fault is detected and no voltage was present between contacts 1+3:

- Replace engine control unit
  => Page 97 .

1.7 - Checking ignition transformer

Special tools, workshop equipment, testers, measuring instruments and auxiliary items required

- Test box V.A.G 1598/22
- Hand multimeter V.A.G 1526 or multimeter V.A.G 1715
- Adapter set V.A.G 1594

Protected by copyright. Copyright by Volkswagen AG. Volkswagen AG does not guarantee or assume any liability with respect to the correctness of information in this document. Copyright by Volkswagen AG. Not permitted for private or commercial purposes without authorisation by Volkswagen AG.
satelettronica

- Diode test lamp V.A.G 1527
- Current flow diagram

Check conditions

- The battery voltage must be at least 11.5 V.
- Hall sender must be OK, checking =>Page 114 .
- Engine speed sender must be OK, checking Page 75 .

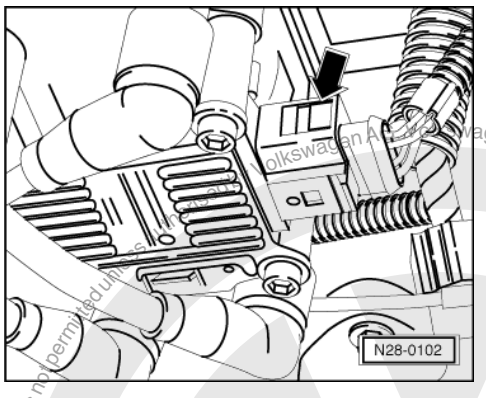

Test sequence

-> Pull 4 pin connector off ignition transformer -arrow-.

Checking voltage supply

Test conditions

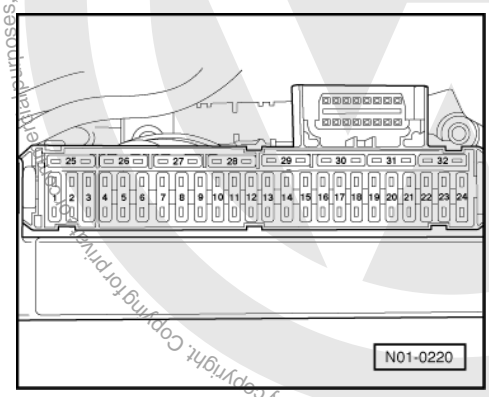

- -> Fuse 4 must be OK.

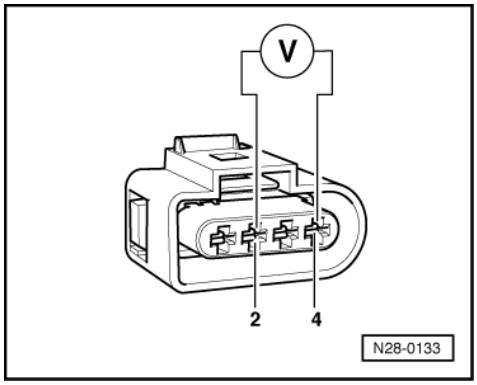

- -> Using multimeter and adapter cables from V.A.G 1594 measure the supply voltage between contacts 2 +4 of disconnected connector.
- Switch on ignition.
  Specification: min. 11.5 V

Protected by copyright. Copying for private or commercial purposes, in part or in whole, is not permitted unless authorised by Volkswagen AG. Volkswagen AG does not guarantee or accept any liability with respect to the correctness of information in this document. Copyright by Volkswagen AG.
satelettronica

- Switch off ignition.

If no voltage is present:

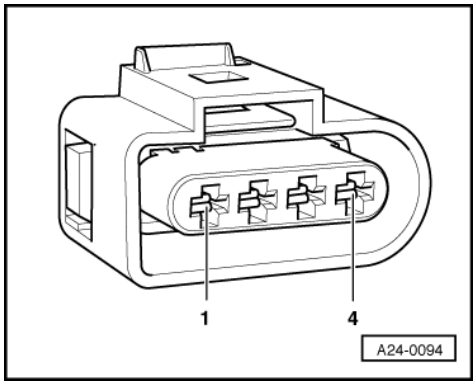

- -> Check wire between 4 pin connector contact 2 and relay plate for open circuit according to current flow diagram.
  Wire resistance: max. 1.5 ω
- Check wire between 4 pin connector contact 4 and earth for open circuit according to current flow diagram.
  Wire resistance: max. 1.5 ω

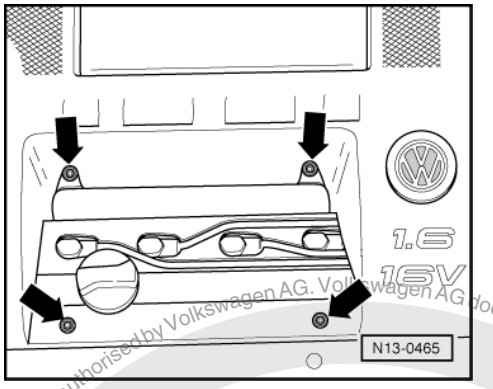

Checking activation

Warning! During the following test do not touch the terminals of the ignition transformer or test cables.

- -> Remove cover above camshaft housing -arrows-.

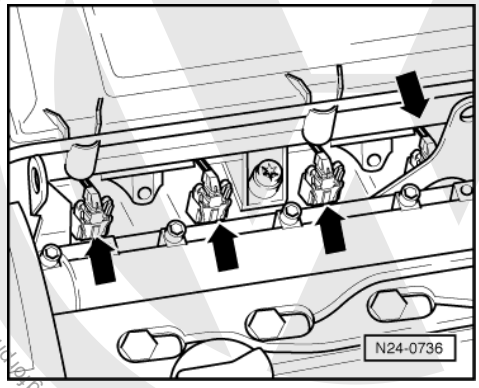

- -> Pull plug -arrows- off all injectors.

satelettronica
Protected by copyright. Copying for private or commercial purposes, in part or in whole, is not permitted unless authorised by Volkswagen AG. Volkswagen AG does not guarantee or accept any liability with respect to the correctness of information in this document. Copyright by Volkswagen AG.

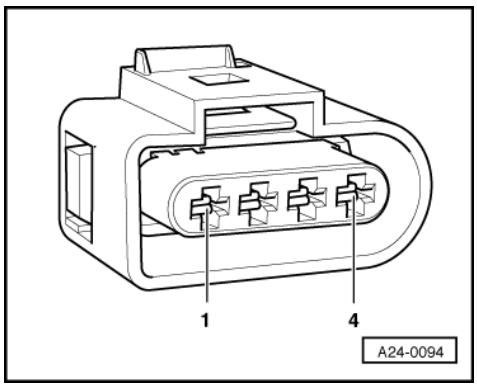

- -> Connect diode test lamp V.A.G 1527 with adapter cables from V.A.G 1594 to
  contacts 1 + 4 (ignition output 1),
  contacts 3 + 4 (ignition output 2)
  of disconnected connector.
- Operate starter and check the ignition signal from engine control unit.
  The LED must flicker
- Switch off ignition.

If the LED flickers and there is voltage between contacts 2 + 4:
- Replace ignition transformer (N152)
  => Page 110 , item 2 .

The LED does not flicker:
- Check wiring => Page 118

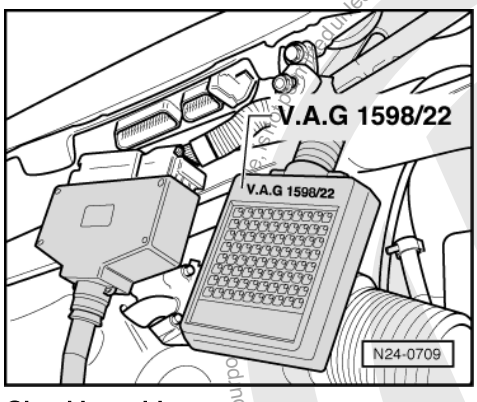

Checking wiring
- Remove wiper arms and cowl panel:

=> Electrical system; Repair group 92; windscreen wiper system; removing and installing windscreen wiper system windscreen wiper system removing and installing windscreen wiper system
- -> Connect test box V.A.G 1598/22 to control unit wiring harness.

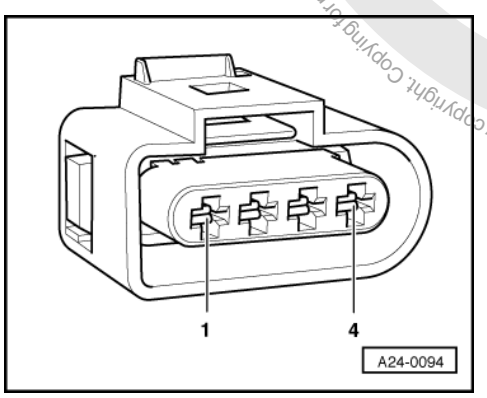

Protected by copyright. Copying or publishing in any form without prior written authorised by Volkswagen AG. Volkswagen AG does not guarantee or accept any liability with respect to the correctness of information in this document. Copyright by Volkswagen AG.
satelettronica

- -> Check wiring between test box and 4 pin connector for open circuit according to current flow diagram.
  Contact 1+socket 71
  Contact 3+socket 78
  Wire resistance: Max. 1.5 ω
- Additionally check wires for short to one another.
  Specification: ∞ω

If no wiring fault is detected and voltage was present between contacts 2+4:

- Replace engine control unit
  => Page 97 .

Checking secondary winding

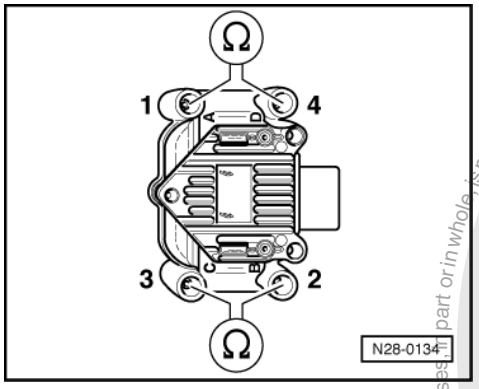

- -> Check the secondary winding on terminal 4 between
  Cyl. 1+Cyl. 4,
  Cyl. 2+Cyl. 3.
  Specification: 4.0... 6.0 kω (at 20 °C)

If the specifications are not attained:

- Replace ignition transformer (N152)
  => Page 110 , item 2 .

1.8 - Checking knock sensor

Notes:

- It is extremely important to keep to the tightening torque of 20 Nm to ensure the knock sensors perform perfectly.
- Only gold-plated contacts may be used when servicing the knock sensor connector contacts.

Special tools, workshop equipment, testers, measuring instruments and auxiliary items required

- Test box V.A.G 1598/22
- Hand multimeter V.A.G 1526 or multimeter V.A.G 1715
- Adapter set V.A.G 1594
- Current flow diagram

Test conditions

- Knock sensor fault recognised by self-diagnosis =>Page 7 , interrogating and erasing fault memory.

Protected by copyright. Copying for private or commercial purposes, part or in whole, is not permitted unless authorised by Volkswagen AG. Volkswagen AG does not guarantee or accept any liability with respect to the correctness of information in this document. Copyright by Volkswagen AG.
satelettronica

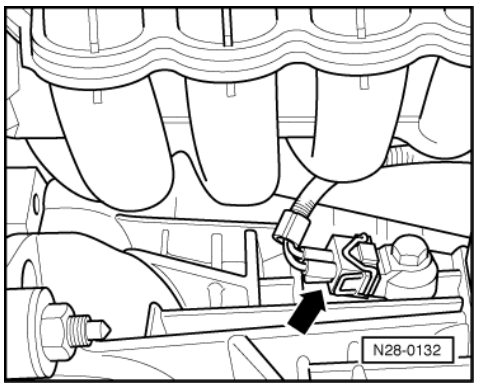

Test sequence

- -> Pull 2 pin connector off knock sensor -arrow-.
- Remove wiper arms and cowl panel:

=> Electrical system; Repair group 92; windscreen wiper system; removing and installing windscreen wiper system windscreen wiper system removing and installing windscreen wiper system

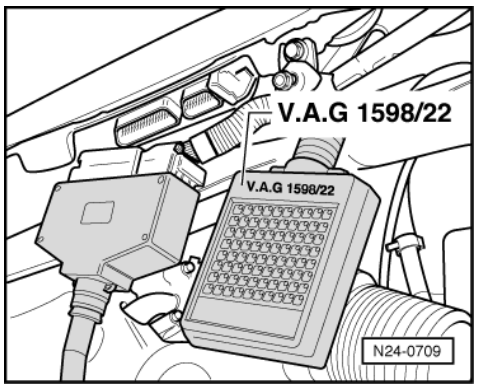

- -> Connect test box V.A.G 1598/22 to control unit wiring harness.

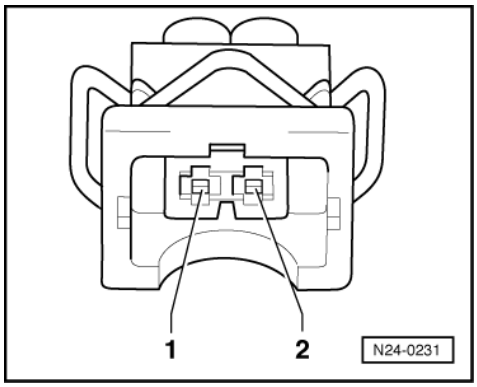

- -> Check wiring between test box and 2 pin connector for open circuit using current flow diagram.
  Contact 1+socket 68
  Contact 2+socket 60
  Wire resistance: Max. 1.5 ω
- Additionally check wires for short to one another.
  Specification: ∞ω

If no wiring fault is detected:

- Loosen knock sensor and tighten again to 20 Nm.
- Carry out test drive.

Protected by copyright. Copying for private or commercial purposes, in part or in whole, is not permitted unless authorised by Volkswagen AG. Volkswagen AG does not guarantee or accept any liability with respect to the correctness of information in this document. Copyright by Volkswagen AG.
satelettronica

Observe the valid safety precautions when carrying out a test drive => Page 112 .

During the road test the following operating conditions must be fulfilled:
- The coolant temperature must exceed 80 °C .

- When the temperature is reached, the operating conditions
  Idling
  Part throttle
  Full throttle
  Overrun
  must be attained several times.
- At full throttle the speed must exceed 3500 rpm.

Again interrogate the control unit fault memory.

If the fault is still present:

- Replace knock sensor (G61) =>Page 111 , item 6 .

Protected by copyright. Copying for private or commercial purposes, in part or in whole, is not permitted unless authorised by Volkswagen AG. Volkswagen AG does not guarantee or accept any liability with respect to the correctness of information in this document. Copyright by Volkswagen AG.

satelettronica